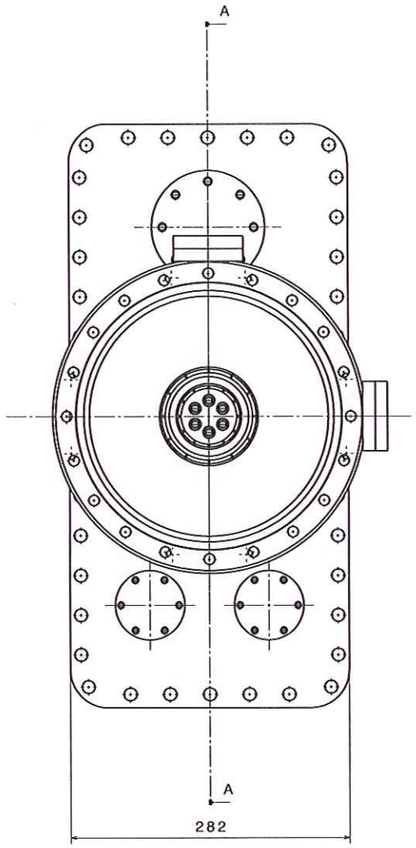

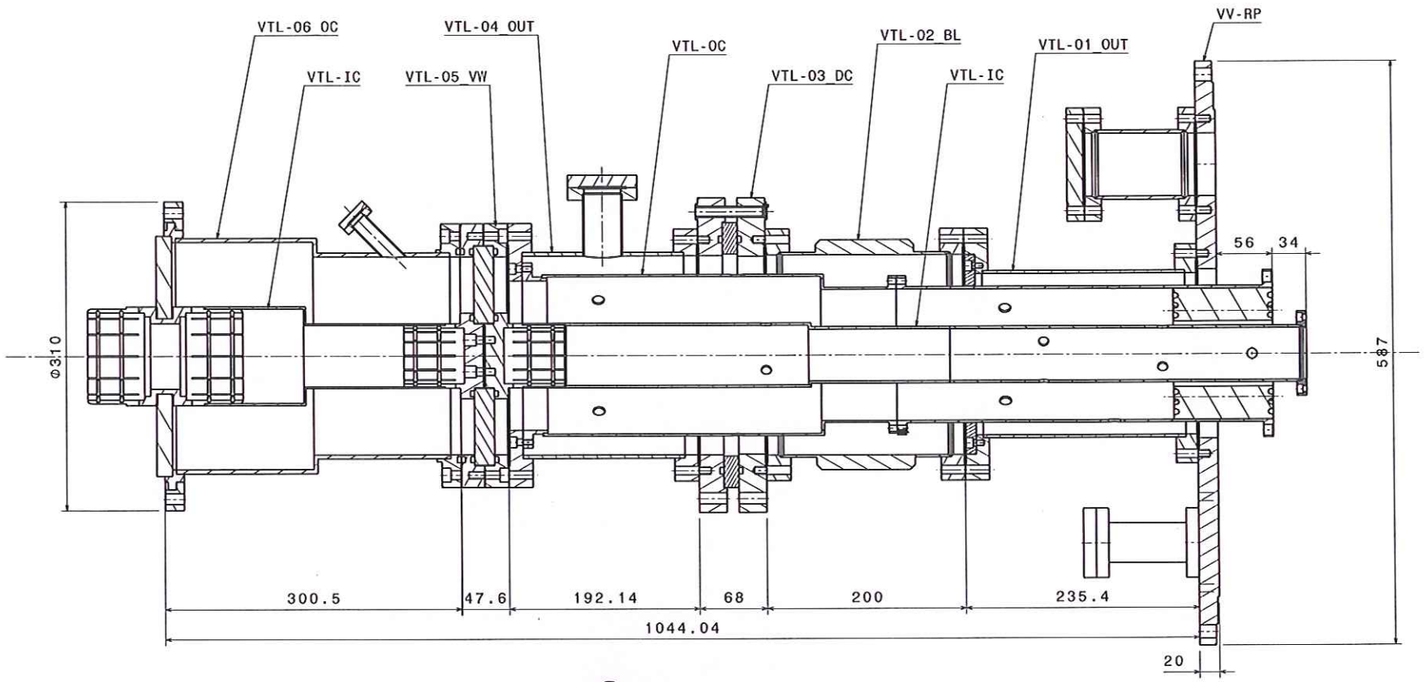

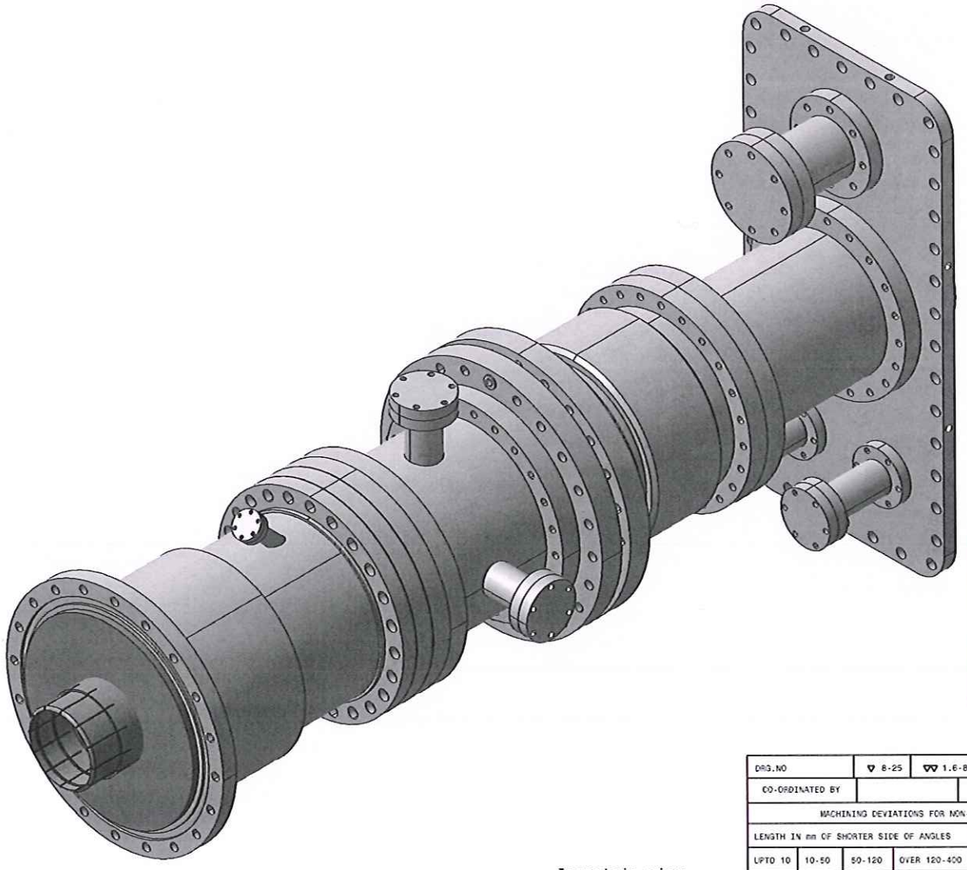

Isometric view
Scale: 1:3

प्लाज़्मा अनुसंधान संस्थान, गांधीनगर /
INSTITUTE FOR PLASMA RESEARCH
GANDHINAGAR
अनुमोदित आरेख/APPROVED DRAWING
हस्ताक्षर/Sign: तारीख/Date: 1/8/16

Iten No.	Part Name	Ref. Sheet No.	Remarks
12	VV-RP_02	12 OF 12	
11	VV-RP_01	11 OF 12	
10	VTL-02-IC	10 OF 12	
9	VTL-01_IC	9 OF 12	
8	VTL-01_OC	8 OF 12	
7	VTL-06	7 OF 12	
6	VTL-05_VW	6 OF 12	
5	VTL-04_OUT	5 OF 12	
4	VTL-03_DC	4 OF 12	
3	VTL-02_BL	3 OF 12	
2	VTL-01_OUT	2 OF 12	
1	VTL-ASSY.	1 OF 12	

DRG.NO	▽ 8-25	▽▽ 1.6-8	▽▽▽ 0.025-1.6	▽▽▽▽ < 0.025
CO-ORDINATED BY				
MACHINING DEVIATIONS FOR NON-TOLERANCED DIMENSIONS				
LENGTH IN mm OF SHORTER SIDE OF ANGLES				
UPTO 10	10-50	50-120	OVER 120-400	
±1°	±0°-30'	±0°-20'	±0°-10'	

LENGTH OR DIA	UPTO 6	6-30	30-120	120-315
	±0.1	±0.2	±0.3	±0.5

REV	ZONE	DESCRIPTION	DATE	REMARKS	APPROVED BY

REVISION COLUMN

ASS'Y GROUP:
ALL DIMENSIONS ARE IN mm UNLESS OTHERWISE STATED
SIZE A1
SCALE -
DATE
DRAWN VRP 14-7-16
DESIGNED DR.KKW
APPROVED -

INSTITUTE FOR PLASMA RESEARCH
BHAT, GANDHINAGAR-382 428.

TITLE VACUUM TRANSMISSION LINE (VTL) ASSY.

REF DRG NO: A1
REV F0
DRG.NO IPR/VTL/A1/16/4026
SHEET 01 OF 12

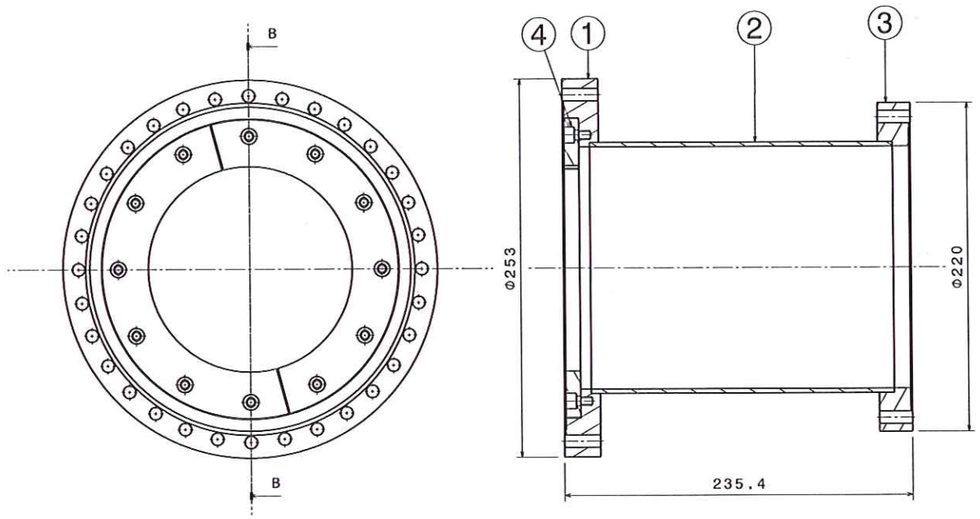

VTL_01 OUT

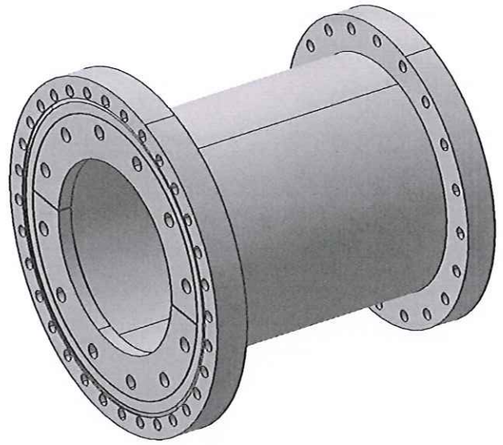

Isometric view
Scale: 1:2

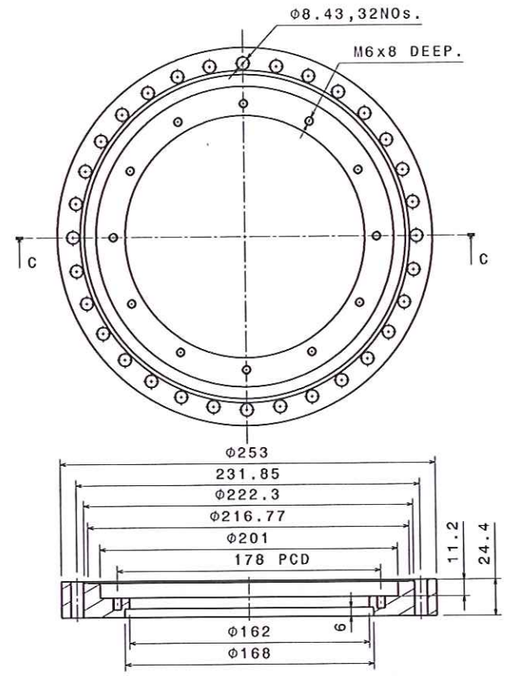

1

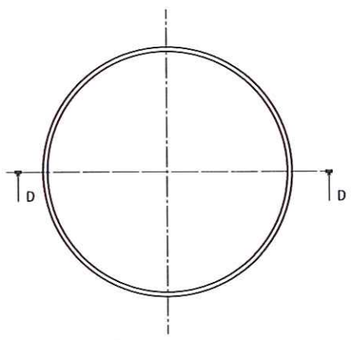

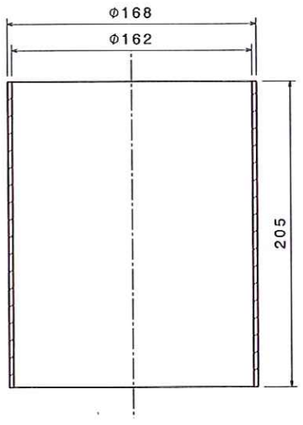

2

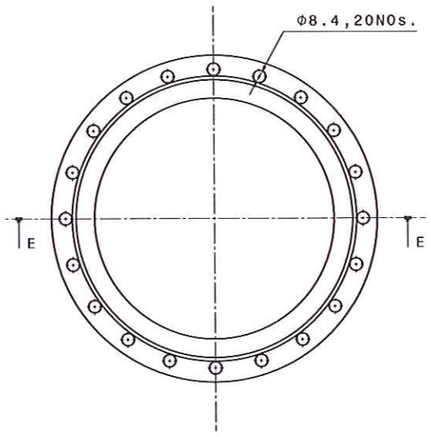

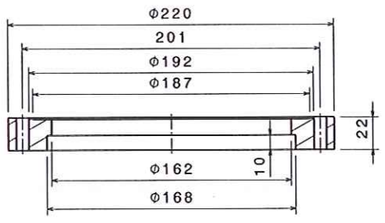

3

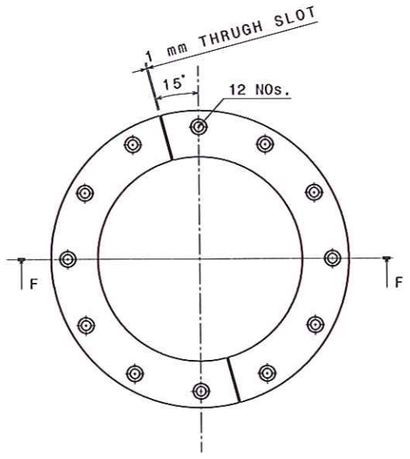

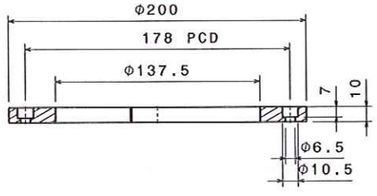

4

प्लाज़्मा अनुसंधान संस्थान, गांधीनगर/
INSTITUTE FOR PLASMA RESEARCH
GANDHINAGAR
अनुमोदित आरेख/APPROVED DRAWING
हस्ताक्षर/Sign: तारीख/Date: 1/8/16

Item No.	Part Name	Qty	Material	Weight	Revision
4	VTL_01_OUT_CER	1	PERSPEX	0kg	-
3	VTL-01_OUT_FL2	1	SS 304L	2.62kg	-
2	VTL-01_OUT_PIPE	1	SS 304L	2.506kg	-
1	VTL-01_OUT_200CF	1	SS 304L	4.217kg	-

DRG.NO | ▽ 8-25 | ▽▽ 1.6-8 | ▽▽▽ 0.025-1.6 | ▽▽▽▽ < 0.025

CO-ORDINATED BY

MACHINING DEVIATIONS FOR NON-TOLERANCED DIMENSIONS

LENGTH IN mm OF SHORTER SIDE OF ANGLES				LENGTH OR DIA	UPTO 6	6-30	30-120	120-315
UPTO 10	10-50	50-120	OVER 120-400					
±1°	±0°-30'	±0°-20'	±0°-10'		±0.1	±0.2	±0.3	±0.5

REVISION COLUMN

REV	ZONE	DESCRIPTION	DATE	REMARKS	APPROVED BY

ASS'Y GROUP:
ALL DIMENSIONS ARE IN mm UNLESS OTHERWISE STATED
SIZE A1

INSTITUTE FOR PLASMA RESEARCH
BHAT, GANDHINAGAR-382 428.

SCALE	-	DATE
DRAWN	VRP	16-7-16
DESIGNED	DRMKW	
APPROVED		

TITLE: VTL OUTERMOST CONDUCTOR (VTL-01 OUT)

REF DRG NO: A1 | REV F0

DRG.NO IPR/VTL/A1/16/4026 | SHEET 02 OF 12

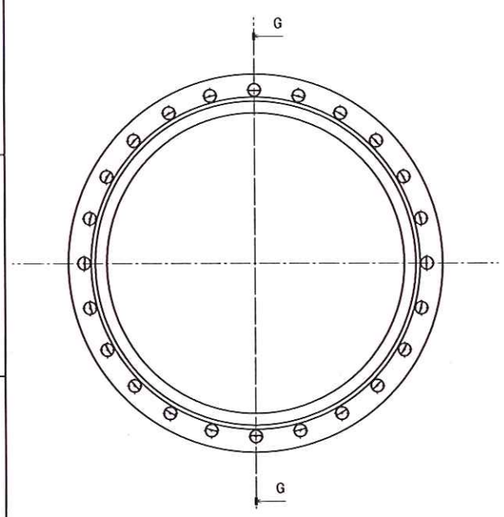

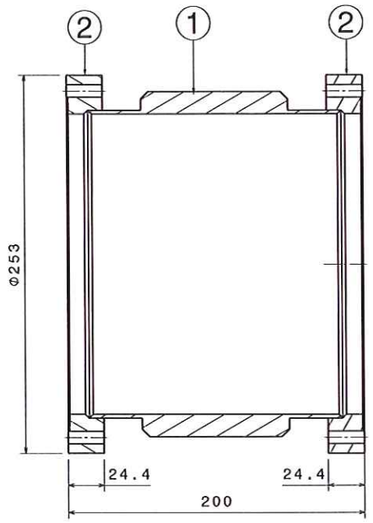

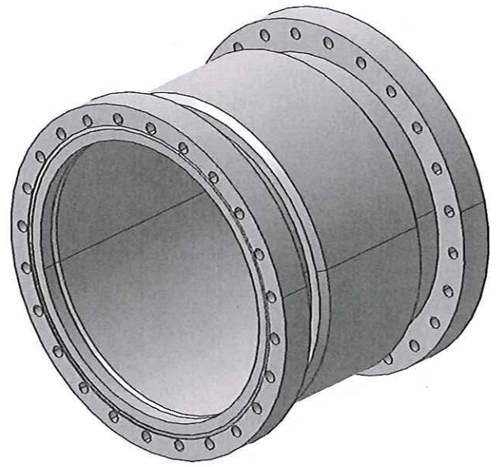

VTL-02_BL

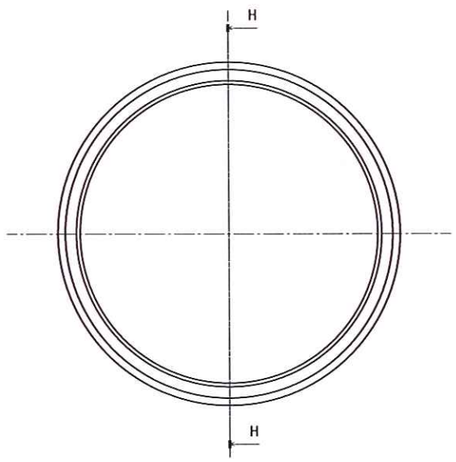

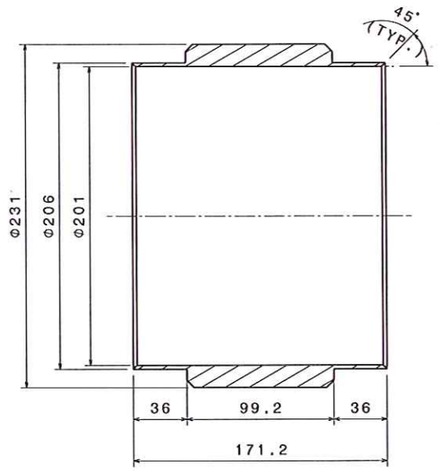

1

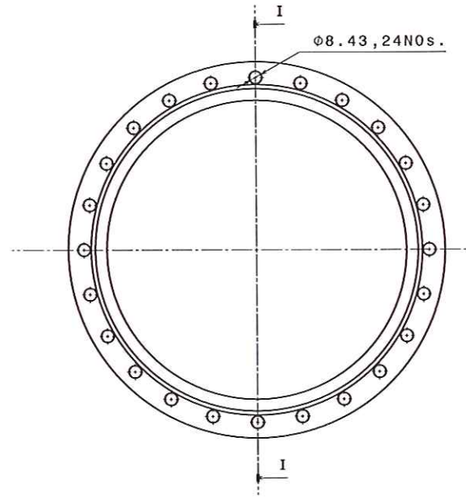

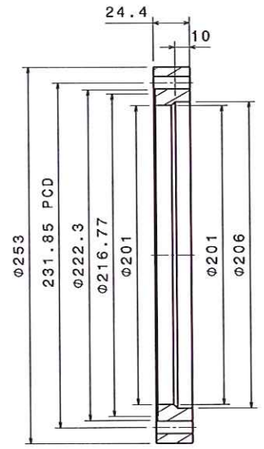

2

प्लाज़्मा अनुसंधान संस्थान, गांधीनगर /
INSTITUTE FOR PLASMA RESEARCH
GANDHINAGAR
अनुमोदित आरेख/APPROVED DRAWING
हस्ताक्षर/Sign: तारीख/Date: 1/8/16

Item No.	Part Name	Qty.	Material	Weight	Revision
2	VTL-02_BL_FL_200CF	2	SS 304L	-3.096kg	
1	VTL-02_BL_FX	1	SS 304L	-8.669kg	

DRG.NO	▽ 8-25	▽▽ 1.6-8	▽▽▽ 0.025-1.6	▽▽▽▽ < 0.025	REVISION COLUMN		
CO-ORDINATED BY					REV	ZONE	DESCRIPTION
MACHINING DEVIATIONS FOR NON-TOLERANCED DIMENSIONS							
LENGTH IN mm OF SHORTER SIDE OF ANGLES				LENGTH OR DIA	UPTO 6	6-30	30-120
UPTO 10	10-50	50-120	OVER 120-400		±0.1	±0.2	±0.3
±1°	±0°-30'	±0°-20'	±0°-10'				

ASS'Y GROUP:		SIZE A1	INSTITUTE FOR PLASMA RESEARCH BHAT, GANDHINAGAR-382 428.
ALL DIMENSIONS ARE IN 'mm' UNLESS OTHERWISE STATED			
SCALE	-	DATE	TITLE VTL-BELLOW (VTL-02_BL)
DRAWN	VRP		
DESIGNED	DRS/KKW		REF DRG NO: A1 — REV R0
APPROVED			DRG.NO IPR/VTL/A1/16/4026 — SHEET 03 OF 12

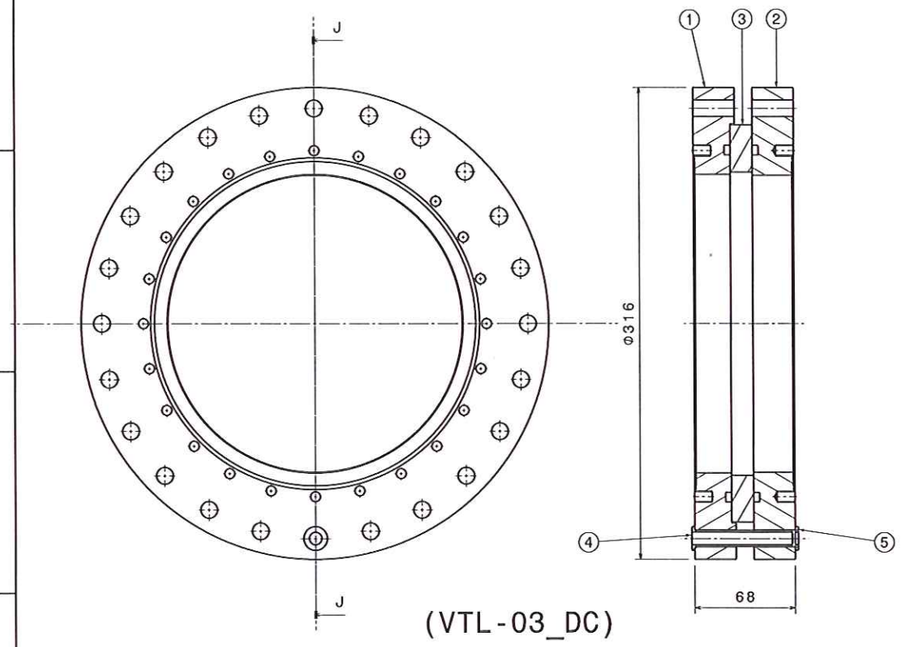

(VTL-03_DC)

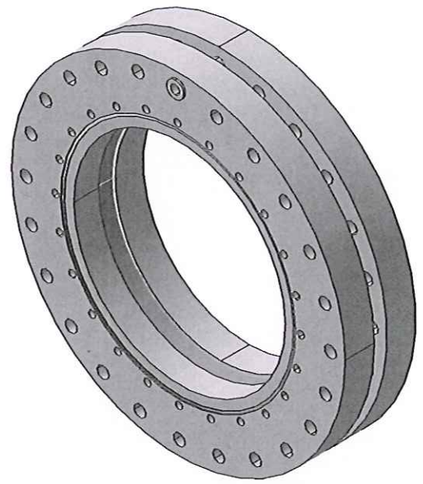

Isometric view
Scale: 1:2

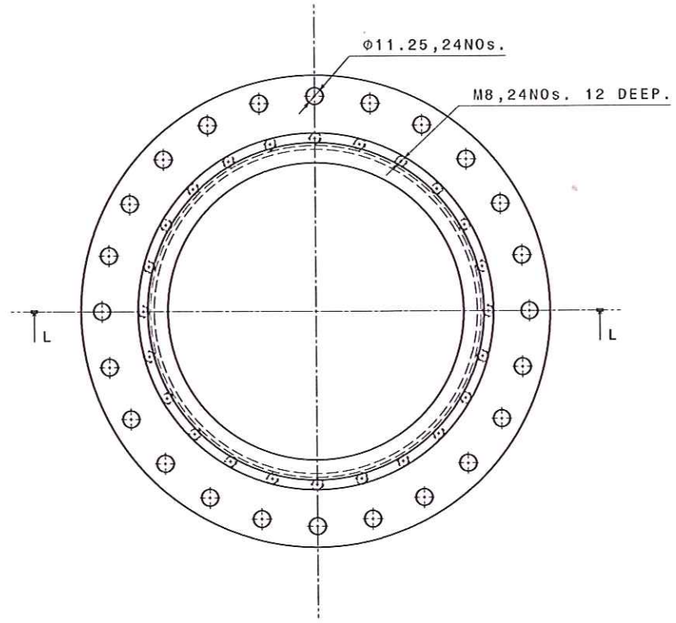

3

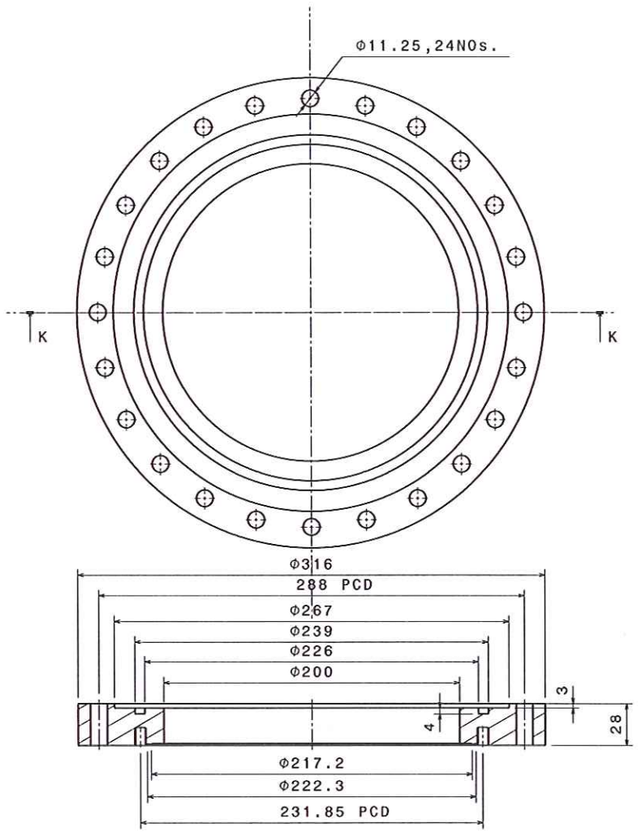

1

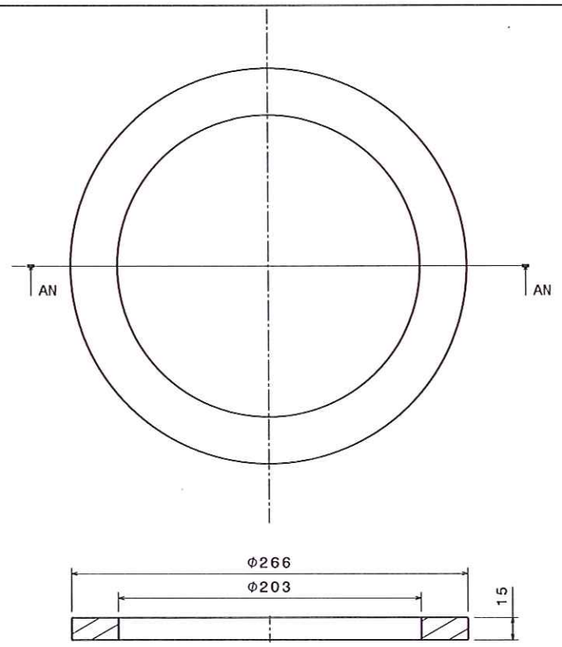

2

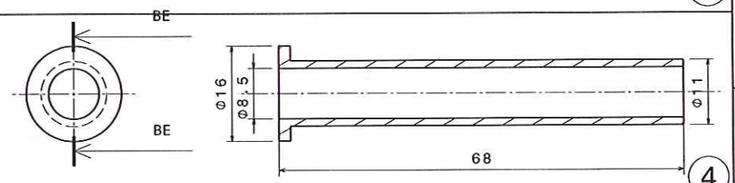

4

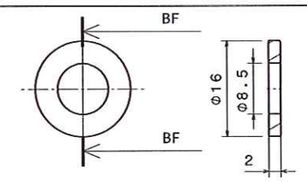

प्लाज़्मा अनुसंधान संस्थान, गांधीनगर/
INSTITUTE FOR PLASMA RESEARCH
GANDHINAGAR
अनुमोदित आरेख/APPROVED DRAWING
हस्ताक्षर/Sign: तारीख/Date: 1/8/16

5

Item No.	Part Name	Qty.	WeightRevision	Material	Revision
5	VTL-03_WASHER	1	NYLON	0kg	-
4	VTL-03_BUSH	1	NYLON	0kg	-
3	VTL-03_DC_02	1	SS 304L	0kg	
2	VTL-03_DC_CER	1	PERSPEX	9.589kg	
1	VTL-03_DC_01	1	SS 304L	8.948kg	

DRG.NO	▽ 8-25	▽▽ 1.6-8	▽▽▽ 0.025-1.6	▽▽▽▽ < 0.025	
CO-ORDINATED BY					
MACHINING DEVIATIONS FOR NON-TOLERANCED DIMENSIONS					
LENGTH IN mm OF SHORTER SIDE OF ANGLES				LENGTH OR DIA	UPTO 6 / 6-30 / 30-120 / 120-315
UPTO 10	10-50	50-120	OVER 120-400		
±1°	±0°-30'	±0°-20'	±0°-10'		±0.1 / ±0.2 / ±0.3 / ±0.5

REVISION COLUMN					
REV	ZONE	DESCRIPTION	DATE	REMARKS	APPROVED BY

ASS'Y GROUP:		SIZE A1	INSTITUTE FOR PLASMA RESEARCH BHAT, GANDHINAGAR-382 428.
ALL DIMENSIONS ARE IN mm UNLESS OTHERWISE STATED			
SCALE	-	DATE	TITLE VTL DC BREAK (VTL-03_DC)
DRAWN	VRP		
DESIGNED	DRAKKW		REF DRG NO: A1 — REV R0
APPROVED			DRG.NO IPR/VTL/A1/16/4026 — SHEET 04 OF 12

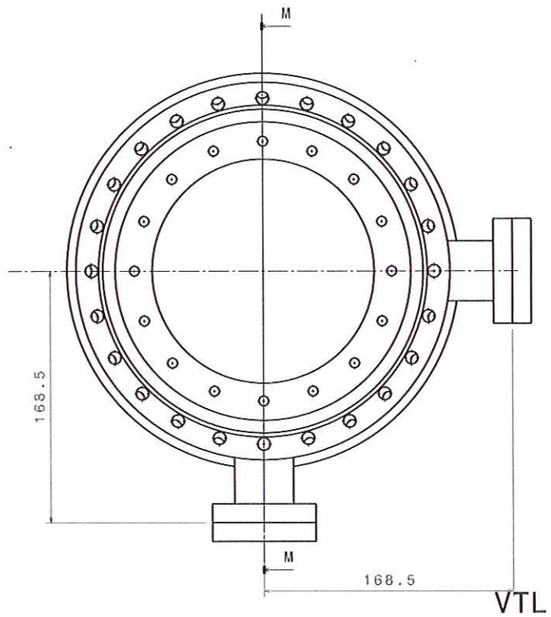

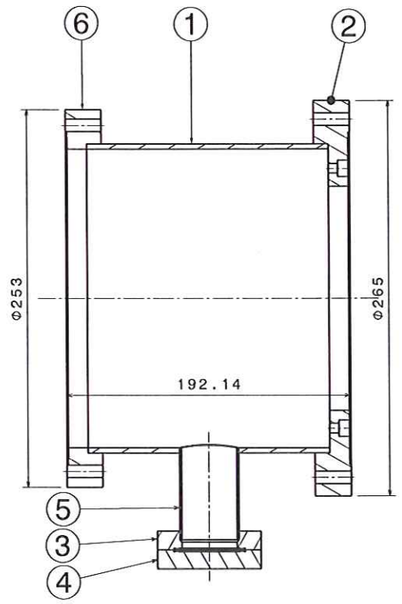

VTL-04_OUT

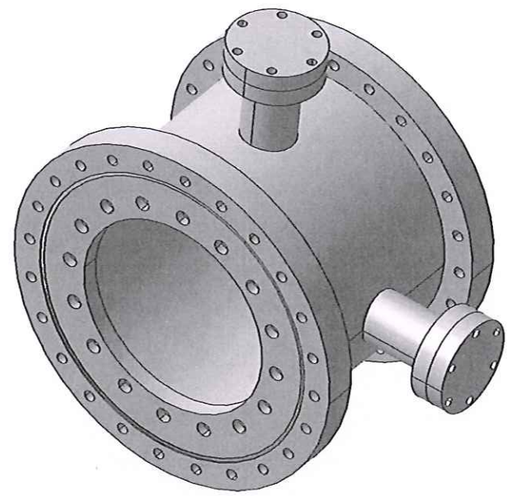

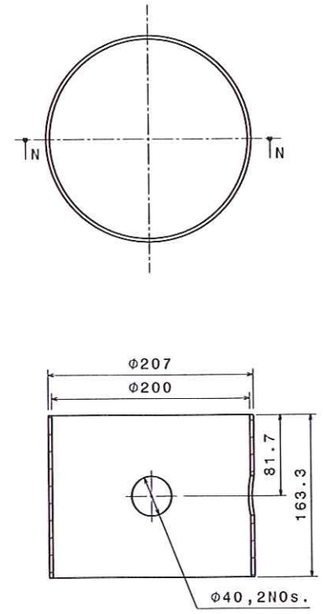

1

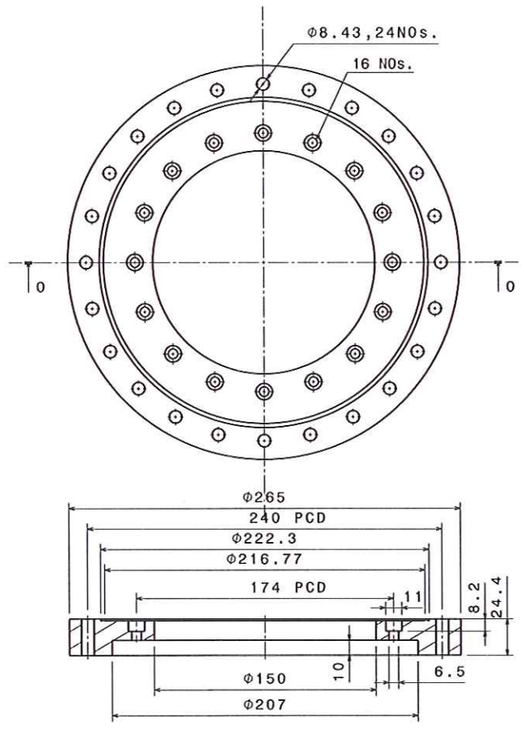

2

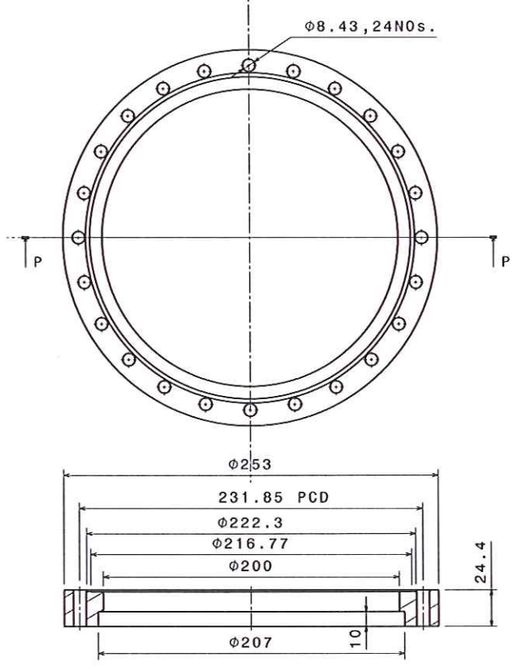

6

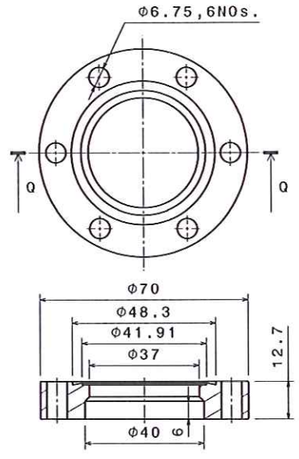

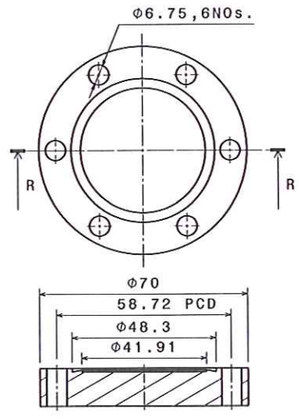

4

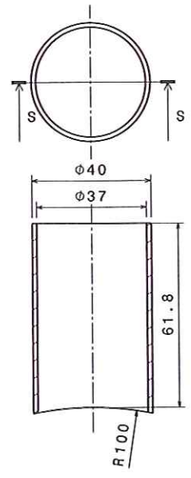

5

प्लाज़्मा अनुसंधान संस्थान, गांधीनगर/
INSTITUTE FOR PLASMA RESEARCH
GANDHINAGAR
अनुमोदित आरेख/APPROVED DRAWING
हस्ताक्षर/Sign: 1/2/16 तारीख/Date:

3

Item No.	Part Name	Material	Qty.	Weight	Rev.
6	VTL-04_OUT_FL4_200CF	SS 304L	1	-3.118kg	
5	VTL-04_OUT_PI2	SS 304L	2	-0.089kg	
4	VTL-04_OUT_FL3_35CF	SS 304L	2	-0.346kg	
3	VTL-04_OUT_FL2_35CF	SS 304L	2	-0.24kg	
2	VTL-04_OUT_FL1	SS 304L	1	-5.371kg	
1	VTL-04_OUT_PI1	SS 304L	1	-2.803kg	

DRG.NO | ▽ 8-25 | ▽▽ 1.6-8 | ▽▽▽ 0.025-1.6 | ▽▽▽▽ < 0.025

CO-ORDINATED BY

MACHINING DEVIATIONS FOR NON-TOLERANCED DIMENSIONS

LENGTH IN mm OF SHORTER SIDE OF ANGLES				LENGTH OR DIA	UPTO 6	6-30	30-120	120-315
UPTO 10	10-50	50-120	OVER 120-400					
±1°	±0°-30'	±0°-20'	±0°-10'		±0.1	±0.2	±0.3	±0.5

REVISION COLUMN

REV	ZONE	DESCRIPTION	DATE	REMARKS	APPROVED BY

ASS'Y GROUP: | SIZE A1

ALL DIMENSIONS ARE IN mm UNLESS OTHERWISE STATED

SCALE - | DATE

DRAWN VRP

DESIGNED DRS/KKM

APPROVED

INSTITUTE FOR PLASMA RESEARCH
BHAT, GANDHINAGAR-382 428.

TITLE: VTL OUTERVOST CONDUCTOR (VTL-04_OUT)

REF DRG NO: A1 | REV R0

DRG.NO IPR/VTL/A1/16/4026 | SHEET 05 OF 12

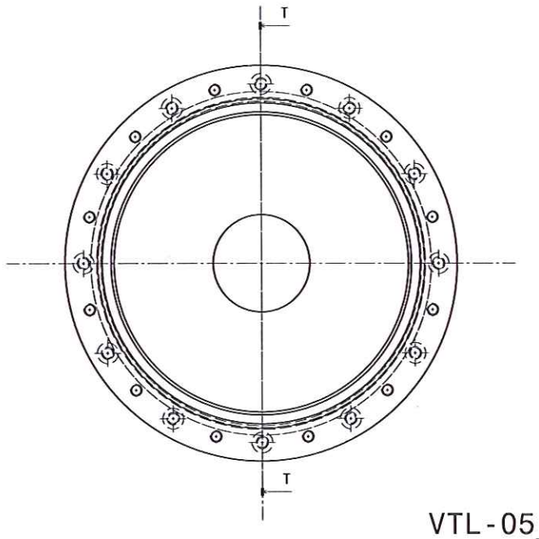

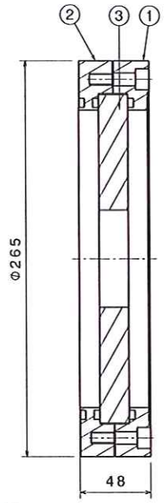

VTL-05_VW

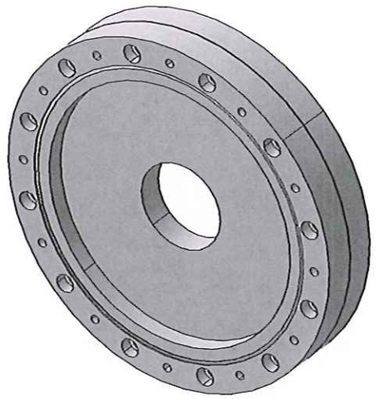

Isometric view
Scale: 1:2

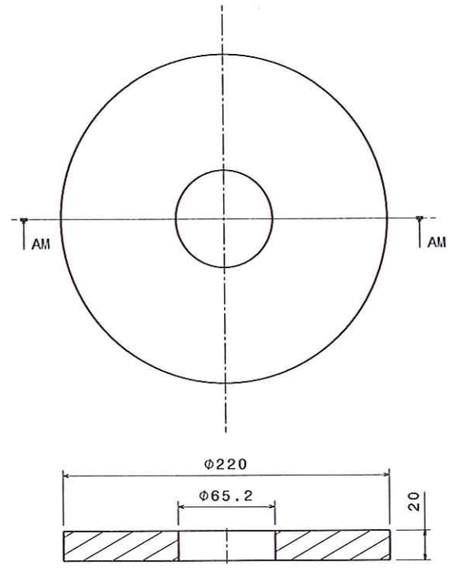

3

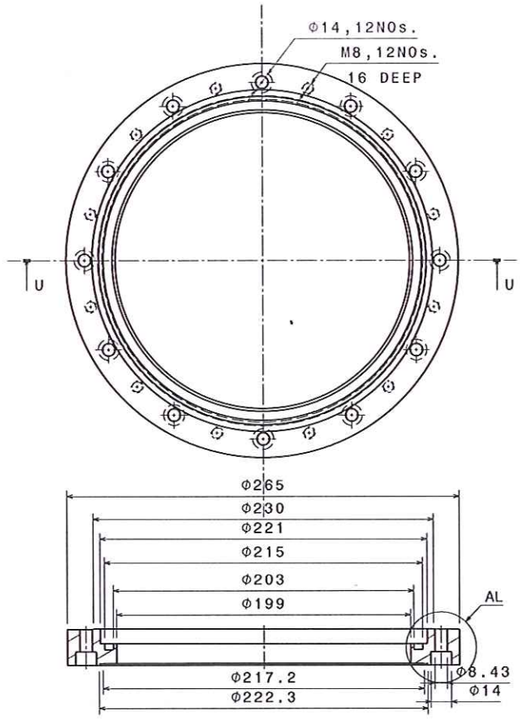

1

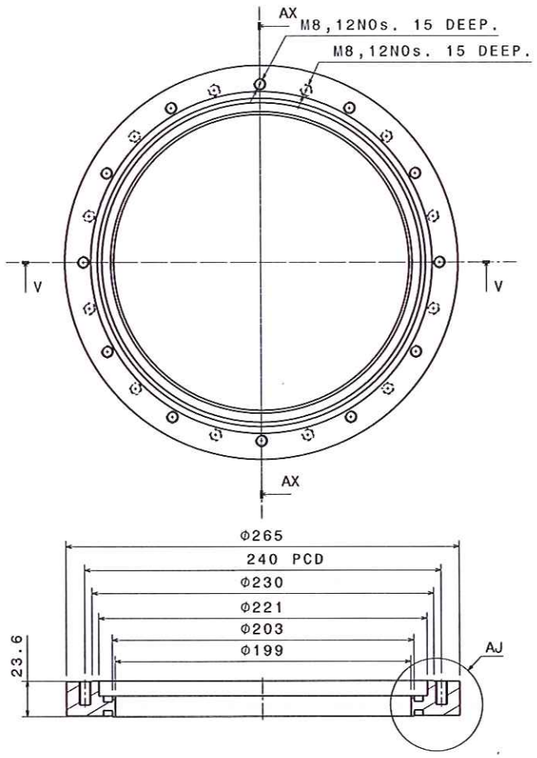

2

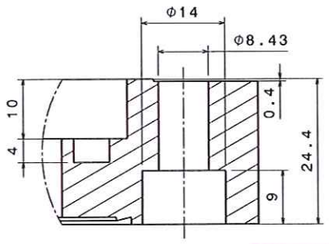

Detail AL
Scale: 2:1

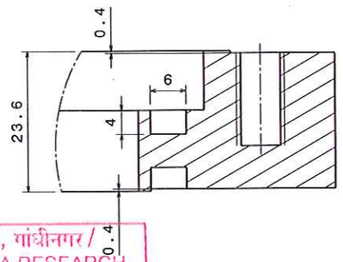

Detail AJ
Scale: 2:1

प्लाज़्मा अनुसंधान संस्थान, गांधीनगर /
INSTITUTE FOR PLASMA RESEARCH
GANDHINAGAR
अनुमोदित आरेख/APPROVED DRAWING
हस्ताक्षर/Sign: तारीख/Date: 1/8/16

Item No.	Part Name	Quantity	Material	Weight	Revision
3	VTL-05_VW_CER	1	PERSPEX	-0kg	
2	VTL-05_VW_02	1	SS 304L	-3.438kg	
1	VTL-05_VW_01	1	SS 304L	-3.545kg	

DRG.NO | ▽ 8-25 | ▽▽ 1.6-8 | ▽▽▽ 0.025-1.6 | ▽▽▽▽ < 0.025

CO-ORDINATED BY

MACHINING DEVIATIONS FOR NON-TOLERANCED DIMENSIONS

LENGTH IN mm OF SHORTER SIDE OF ANGLES				LENGTH OR DIA	UPTO 6	6-30	30-120	120-315
UPTO 10	10-50	50-120	OVER 120-400					
±1°	±(0°-30')	±(0°-20')	±(0°-10')		±0.1	±0.2	±0.3	±0.5

REV	ZONE	DESCRIPTION	DATE	REMARKS	APPROVED BY

REVISION COLUMN

ASS'Y GROUP:
ALL DIMENSIONS ARE IN mm UNLESS OTHERWISE STATED
SCALE - DATE
DRAWN VRP
DESIGNED DRWKXM
APPROVED
REF DRG NO: A1
DRG.NO IPR/VTL/A1/16/4026

SIZE A1

INSTITUTE FOR PLASMA RESEARCH
BHAT, GANDHINAGAR-382 428.

TITLE VTL VACUUM WINDOW (VTL-05_VW)

REV F0
SHEET 06 OF 12

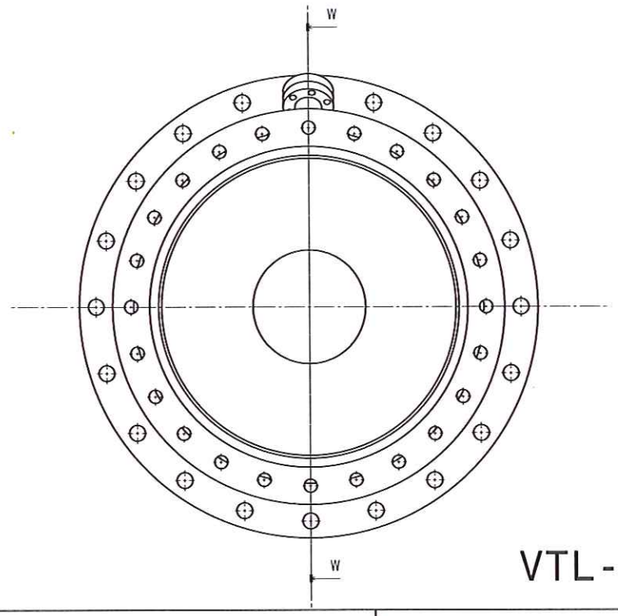

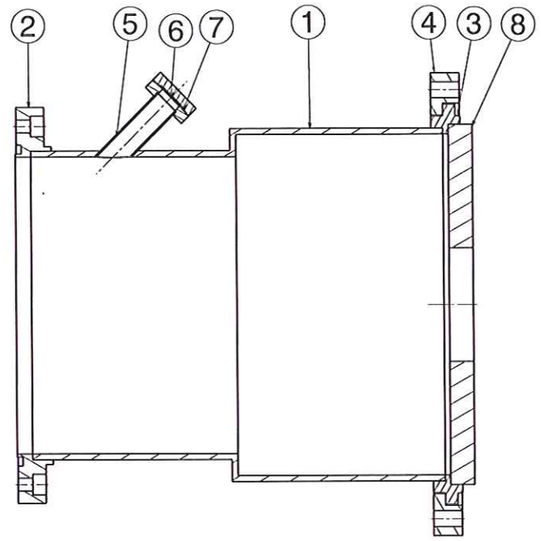

VTL-06_OC

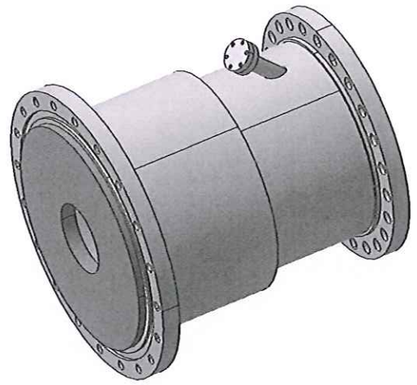

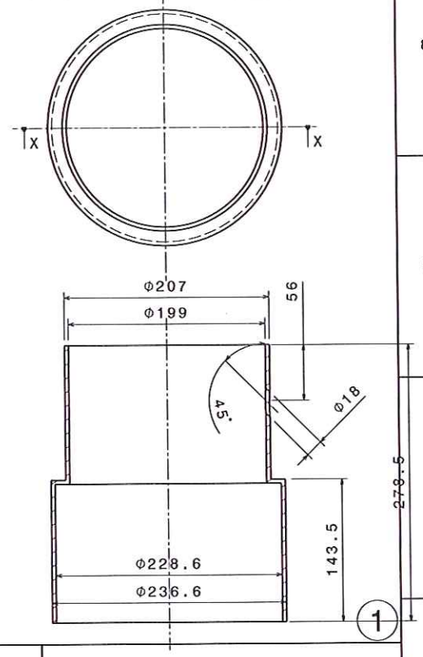

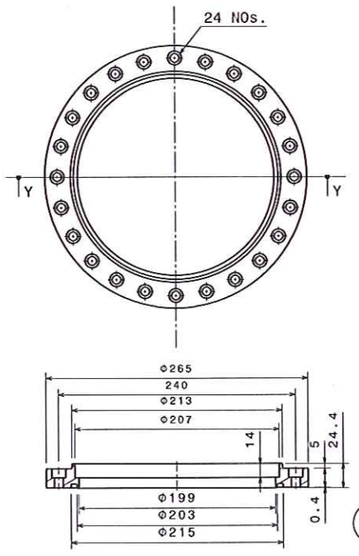

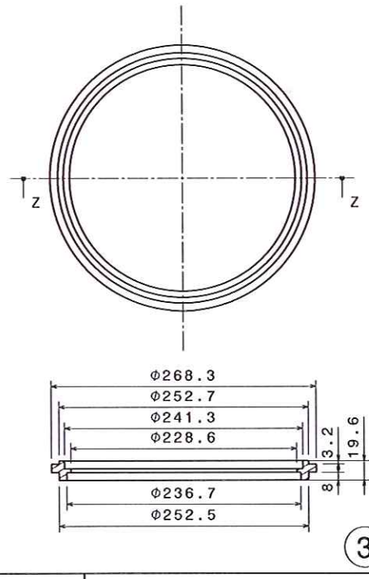

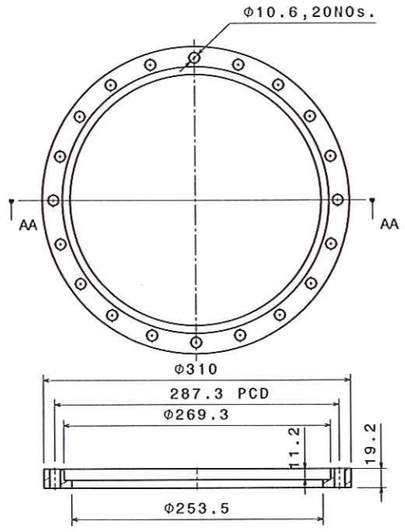

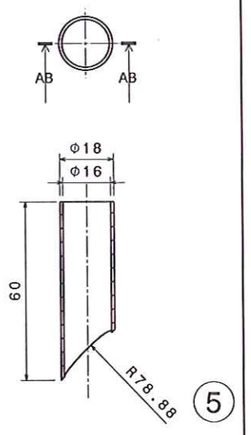

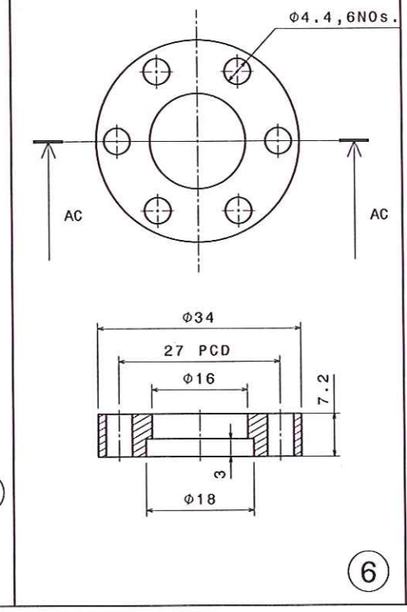

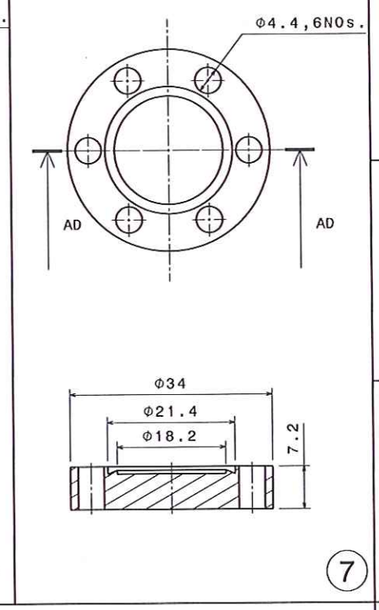

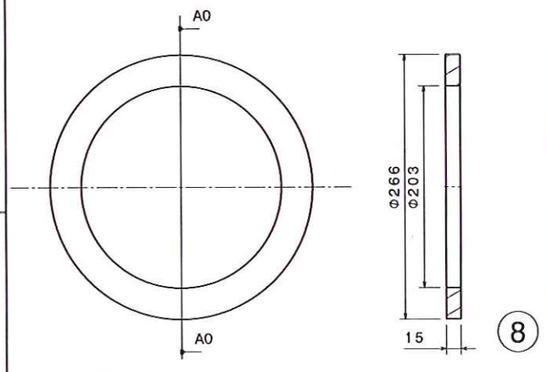

प्लाज़्मा अनुसंधान संस्थान, गांधीनगर/
INSTITUTE FOR PLASMA RESEARCH
GANDHINAGAR
अनुमोदित आरेख/APPROVED DRAWING
हस्ताक्षर/Sign: तारीख/Date: 1/2/16

Item No.	Part Name	Material	Qty.	Weight	Revision
8	VTL-06_OC_TF	TEFLON	1	0kg	SUPPLY BY IPR
7	VTL-06_OC_FL5	SS 304L	1	-0.043kg	
6	VTL-06_OC_FL4	SS 304L	1	-0.034kg	
5	VTL-06_OC_PI2	SS 304L	1	-0.022kg	
4	VTL-06_OC_FL3	SS 304L	1	-2.936kg	
3	VTL-06_OC_FL2	SS 304L	1	-1.339kg	
2	VTL-06_OC_FL1	SS 304L	1	-6.305kg	
1	VTL-06_OC_PI1	SS 304L	1	-6.305kg	

DRG.NO	▽ 8-25	▽▽ 1.6-8	▽▽▽ 0.025-1.6	▽▽▽▽ < 0.025	
CO-ORDINATED BY					
MACHINING DEVIATIONS FOR NON-TOLERANCED DIMENSIONS					
LENGTH IN mm OF SHORTER SIDE OF ANGLES	UPTO 10	10-50	50-120	OVER 120-400	
	±1°	±0°-30'	±0°-20'	±0°-10'	

LENGTH OR DIA	UPTO 6	6-30	30-120	120-315
	±0.1	±0.2	±0.3	±0.5

REV	ZONE	DESCRIPTION	DATE	REMARKS	APPROVED BY

REVISION COLUMN

ASS'Y GROUP: SIZE A1

ALL DIMENSIONS ARE IN mm UNLESS OTHERWISE STATED

		DATE
SCALE	-	
DRAWN	VRP	
DESIGNED	DRWKM	
APPROVED		

INSTITUTE FOR PLASMA RESEARCH
BHAT, GANDHINAGAR-382 428.

TITLE: VTL OUTER CONDUCTOR (VTL-06_OC)

REF DRG NO: A1 REV R0

DRG.NO IPR/VTL/A1/16/4026 SHEET 07 OF 12

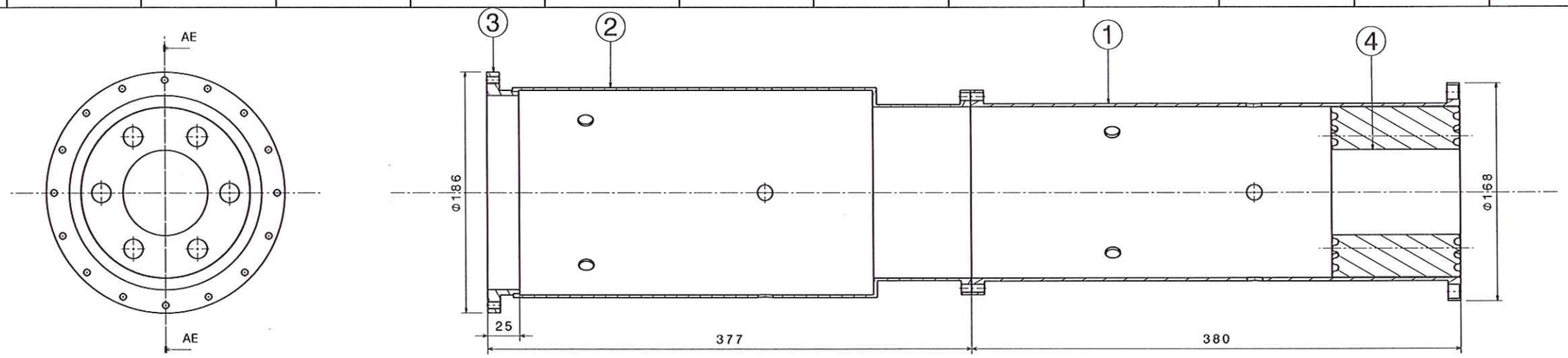

VTL-OC

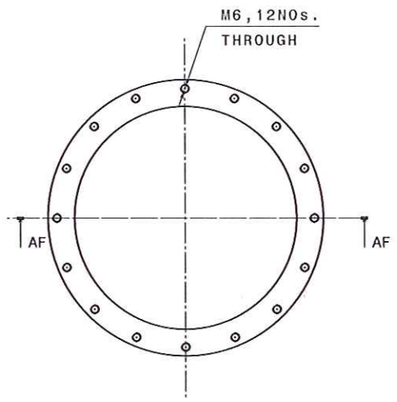

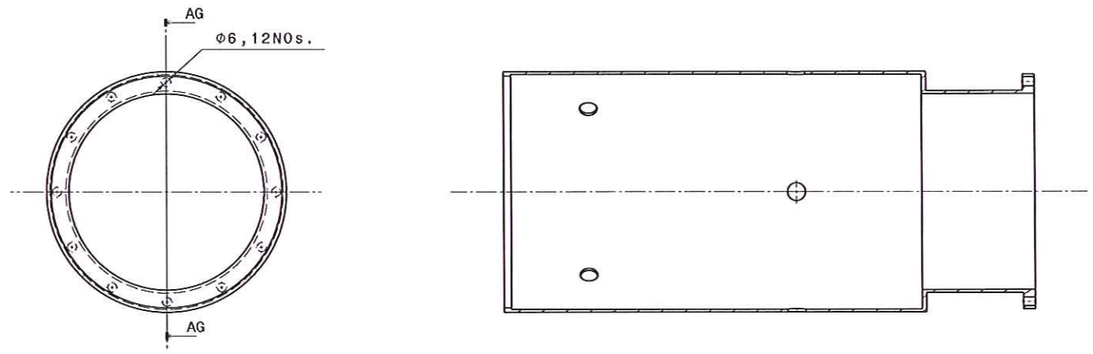

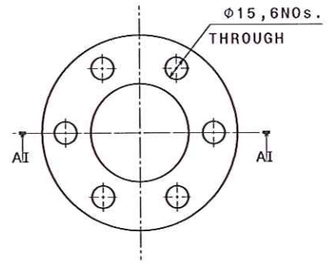

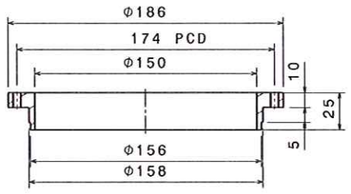

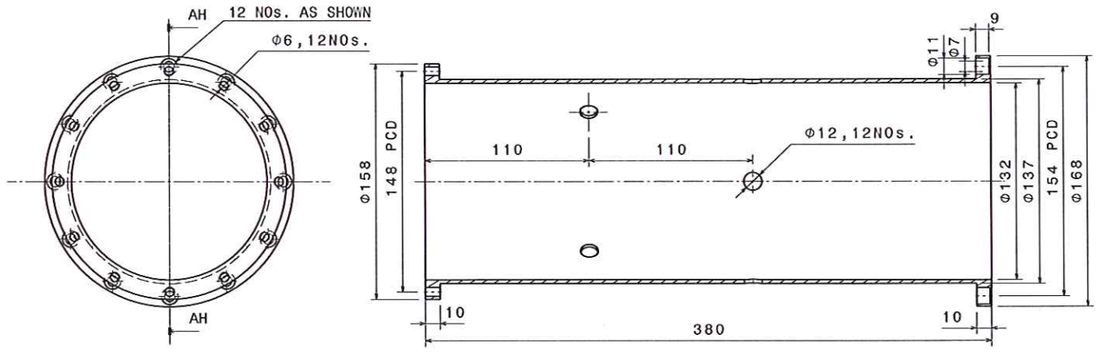

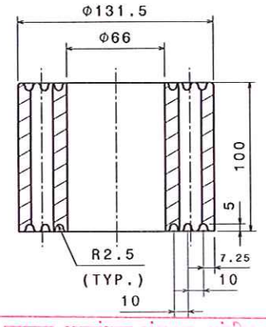

3

2

1

4

प्लाज़्मा अनुसंधान संस्थान, गांधीनगर /
INSTITUTE FOR PLASMA RESEARCH
GANDHINAGAR
अनुमोदित आरेख/APPROVED DRAWING
हस्ताक्षर/Sign: तारीख/Date: 18/16

Item No.	Part Name	Quantity	Material	Weight	Revision
4	VTL-01_CP	1	CERAMIC	-0kg	SUPPLY BY IPR
3	VTL-01_OCF	1	SS 304L	-0.932kg	
2	VTL-01_OC2	1	SS 304L	-3.17kg	
1	VTL-01_OC1	1	SS 304L	-3.992kg	

DRG.NO	▽ 8-25	▽▽ 1.6-8	▽▽▽ 0.025-1.6	▽▽▽▽ < 0.025			
CO-ORDINATED BY							
MACHINING DEVIATIONS FOR NON-TOLERANCED DIMENSIONS							
LENGTH IN mm OF SHORTER SIDE OF ANGLES				LENGTH OR DIA	UPTO 6	6-30	30-120	120-315
UPTO 10	10-50	50-120	OVER 120-400					
±1°	±0°-30'	±0°-20'	±0°-10'		±0.1	±0.2	±0.3	±0.5

REV	ZONE	DESCRIPTION	DATE	REMARKS	APPROVED BY

REVISION COLUMN

ASS'Y GROUP:		SIZE A1	INSTITUTE FOR PLASMA RESEARCH BHAT, GANDHINAGAR-382 428.
ALL DIMENSIONS ARE IN mm UNLESS OTHERWISE STATED			
SCALE	-	DATE	
DRAWN	VRP		TITLE VTL OUTER CONDUCTOR (VTL-OC)
DESIGNED	DR/KKM		REF DRG NO: A1 — REV R0
APPROVED			DRG.NO IPR/VTL/A1/16/4026 — SHEET 08 OF 12

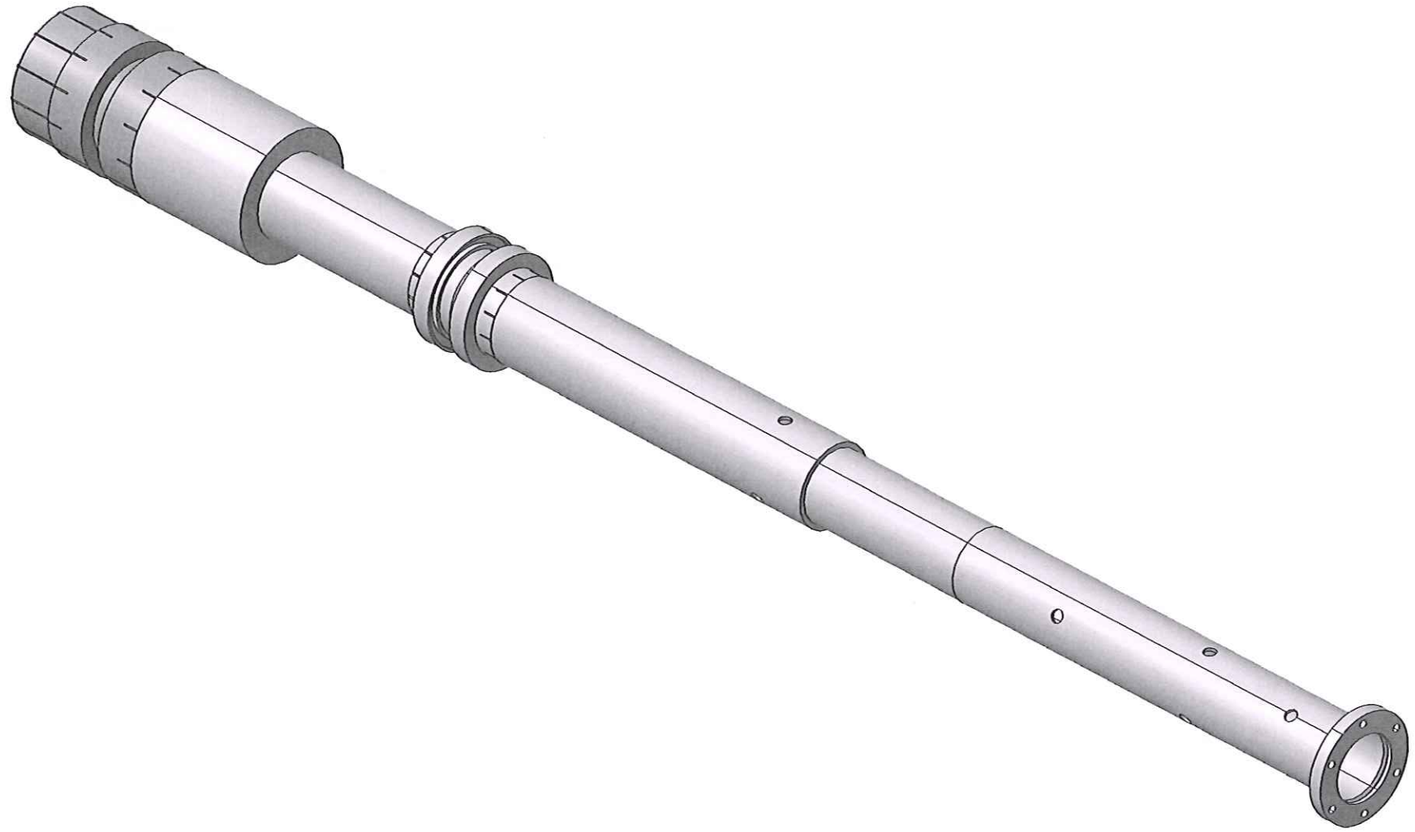

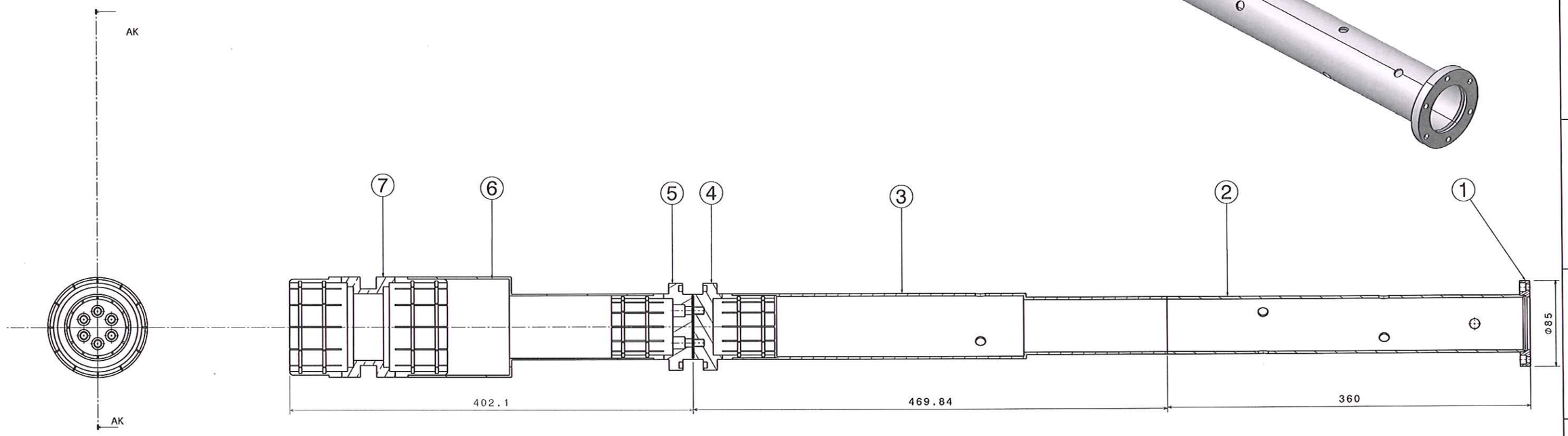

VTL-IC

प्लाज़्मा अनुसंधान संस्थान, गांधीनगर/
INSTITUTE FOR PLASMA RESEARCH
GANDHINAGAR
अनुमोदित आरेख/APPROVED DRAWING
हस्ताक्षर/Sign: तारीख/Date:

Item No.	Part Name	Material	Quantity	Weight	Revision
7	VTL-IC_01_ICJ3	BRASS	1	-0kg	SUPPLY BY IPR
6	VTL-IC_01_PI3	SS 304L	1	-0.893kg	
5	VTL-IC_01_ICJ2	SS 304L	1	-0.914kg	
4	VTL-IC_01_ICJ1	SS 304L	1	-0.982kg	
3	VTL-IC_01_PI2	SS 304L	1	-1.537kg	
2	VTL-IC_01_PI1	SS 304L	1	-1.174kg	
1	VTL-IC_01_FL	SS 304L	1	-0.24kg	

DRG.NO	▽ 8-25	▽▽ 1.6-8	▽▽▽ 0.025-1.6	▽▽▽▽ < 0.025
CO-ORDINATED BY				

MACHINING DEVIATIONS FOR NON-TOLERANCED DIMENSIONS

LENGTH IN mm OF SHORTER SIDE OF ANGLES				LENGTH OR DIA	UPTO 6	6-30	30-120	120-315
UPTO 10	10-50	50-120	OVER 120-400					
±1°	±0°-30'	±0°-20'	±0°-10'		±0.1	±0.2	±0.3	±0.5

REVISION COLUMN

REV	ZONE	DESCRIPTION	DATE	REMARKS	APPROVED BY

ASS'Y GROUP:
ALL DIMENSIONS ARE IN mm UNLESS OTHERWISE STATED
SIZE A1

SCALE	-	DATE
DRAWN	VRP	
DESIGNED	DPS/KKM	
APPROVED		

INSTITUTE FOR PLASMA RESEARCH
BHAT, GANDHINAGAR-382 428.

TITLE: VTL INNER CONDUCTOR ASSY (VTL-IC)

REF DRG NO: A1 REV R0

DRG.NO IPR/VTL/A1/16/4026 SHEET 09 OF 12

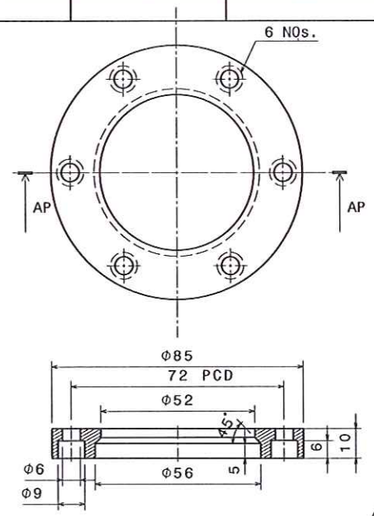

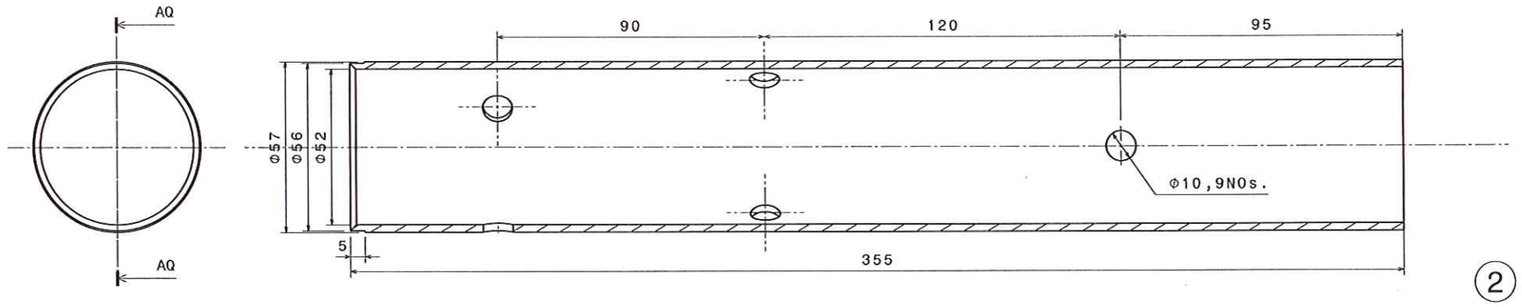

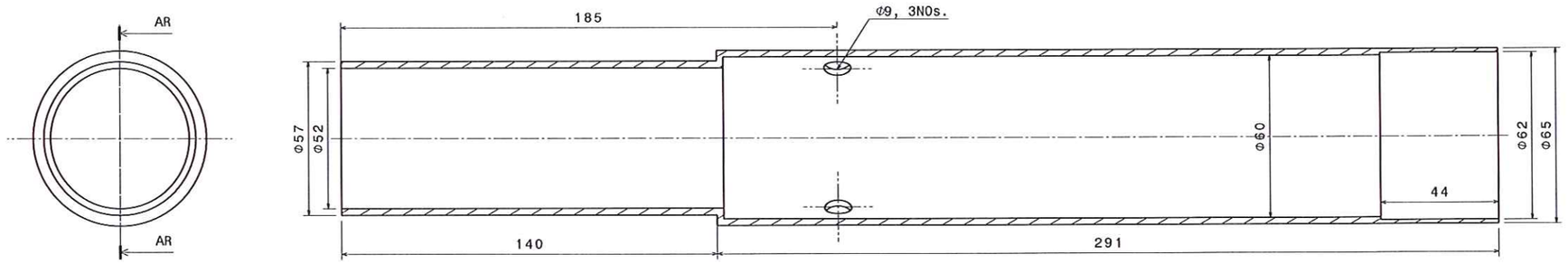

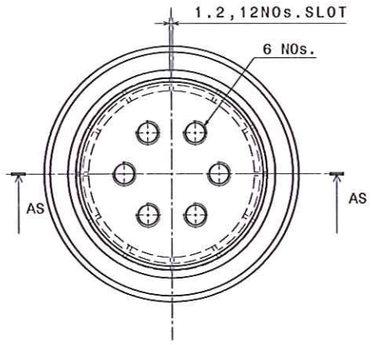

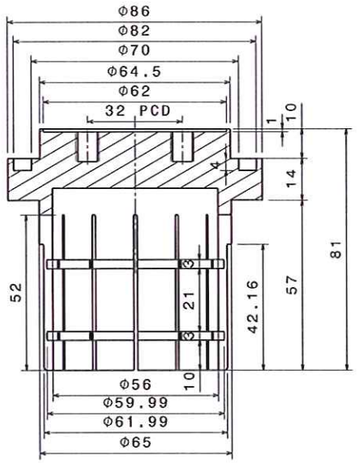

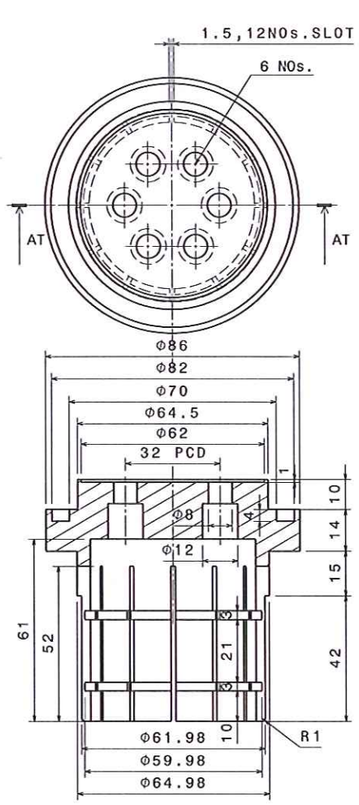

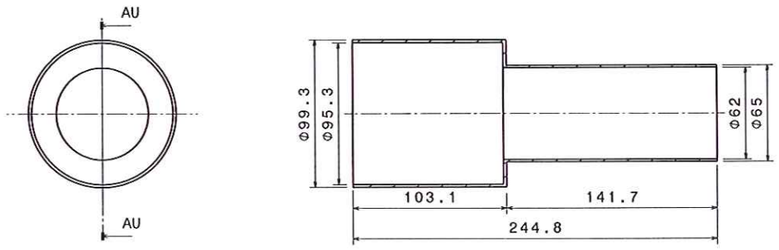

प्लाज़्मा अनुसंधान संस्थान, गांधीनगर /
INSTITUTE FOR PLASMA RESEARCH
GANDHINAGAR
अनुमोदित आरेख/APPROVED DRAWING
हस्ताक्षर/Sign: तारीख/Date: 1/8/16

DRG.NO	▽ 8-25	▽▽ 1.6-8	▽▽▽ 0.025-1.6	▽▽▽▽ < 0.025				REVISION COLUMN					ASS'Y GROUP:	SIZE A1	INSTITUTE FOR PLASMA RESEARCH		
CO-ORDINATED BY					REV	ZONE	DESCRIPTION	DATE	REMARKS	APPROVED BY			ALL DIMENSIONS ARE IN mm UNLESS OTHERWISE STATED		BHAT, GANDHINAGAR-382 428.		
MACHINING DEVIATIONS FOR NON-TOLERANCED DIMENSIONS													SCALE -	DATE	TITLE INNER CONDUCTOR DETAILS (VTL-IC)		
LENGTH IN mm OF SHORTER SIDE OF ANGLES				LENGTH OR DIA	UPTO 6	6-30	30-120	120-315					DRAWN VRP				
UPTO 10	10-50	50-120	OVER 120-400										DESIGNED DRUKKW		REF DRG NO: A1		REV R0
±1°	±0°-30'	±0°-20'	±0°-10'		±0.1	±0.2	±0.3	±0.5					APPROVED		DRG.NO IPR/VTL/A1/16/4026		SHEET 10 OF 12

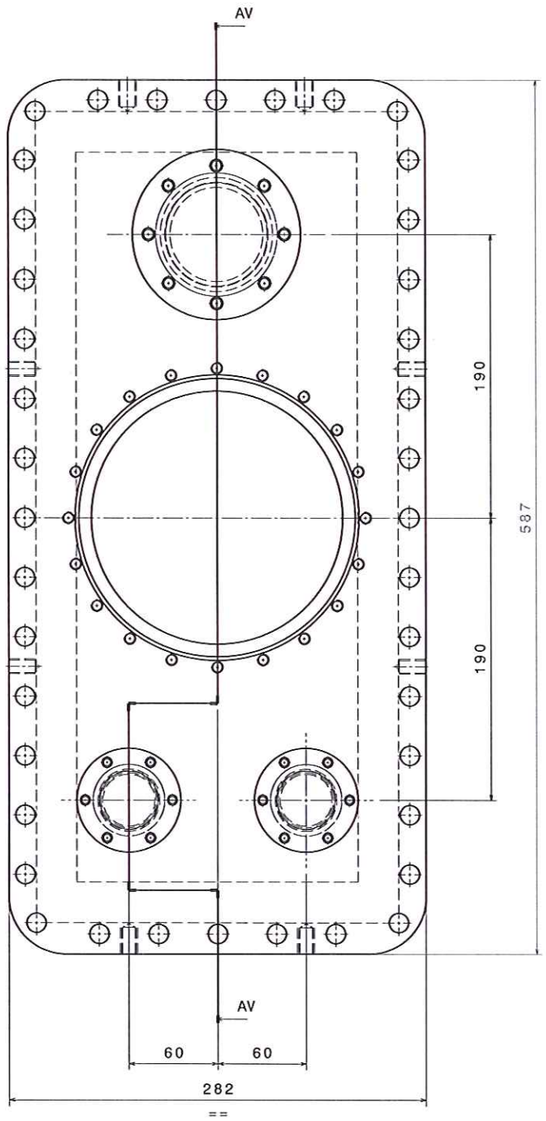

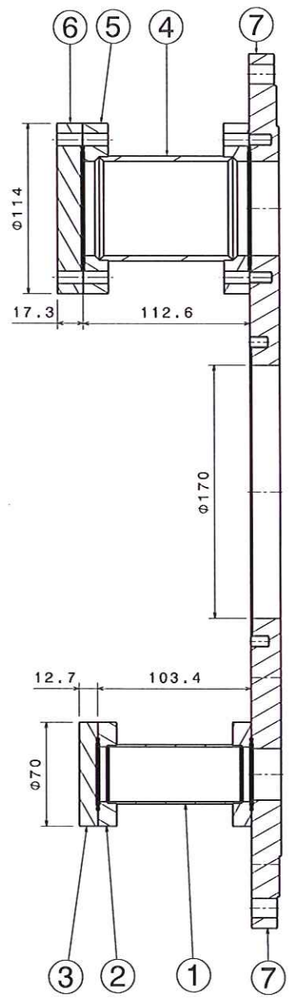

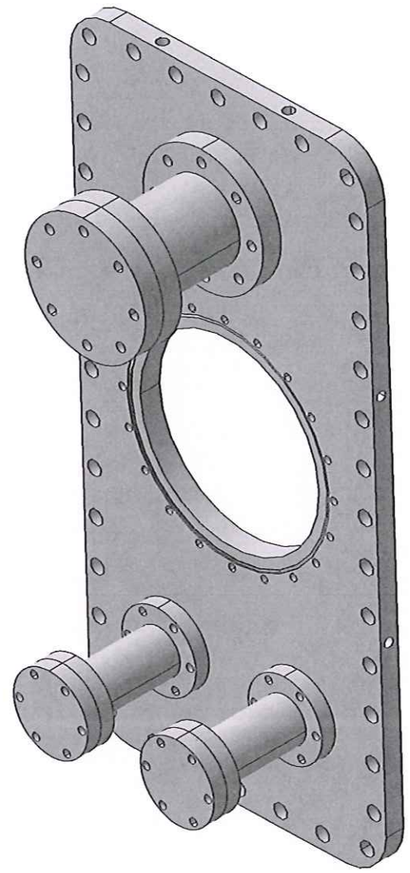

Isometric view
Scale: 1:2

VV-RP

Item No.	Part Name	Material	Qty.	Weight	Revision
7	VV-RP_03_FL5	SS 304L	1	19.267kg	-
6	VV-RP_03_FL4_63CF	SS 304L	1	1.279kg	-
5	VV-RP_03_FL3_63CF	SS 304L	2	0.848kg	-
4	VV-RP_01_PI1	SS 304L	1	0.493kg	-
3	VV-RP_03_FL2_35CF	SS 304L	2	0.346kg	-
2	VV-RP_02_FL1_35CF	SS 304L	4	0.243kg	-
1	VV-RP_01_PI1	SS 304L	2	0.122kg	-

प्लाज़्मा अनुसंधान संस्थान, गांधीनगर /
INSTITUTE FOR PLASMA RESEARCH
GANDHINAGAR
अनुमोदित आरेख/APPROVED DRAWING
हस्ताक्षर/Sign: तारीख/Date: 1/9/16

DRG.NO	▽ 8-25	▽▽ 1.6-8	▽▽▽ 0.025-1.6	▽▽▽▽ < 0.025	
CO-ORDINATED BY					
MACHINING DEVIATIONS FOR NON-TOLERANCED DIMENSIONS					
LENGTH IN mm OF SHORTER SIDE OF ANGLES				LENGTH OR DIA	UPTO 6 / 6-30 / 30-120 / 120-315
UPTO 10 / 10-50 / 50-120 / OVER 120-400					±0.1 / ±0.2 / ±0.3 / ±0.5
±1° / ±0°-30' / ±0°-20' / ±0°-10'					

REV	ZONE	DESCRIPTION	DATE	REMARKS	APPROVED BY
REVISION COLUMN					

ASS'Y GROUP:		SIZE A1
ALL DIMENSIONS ARE IN mm UNLESS OTHERWISE STATED		
SCALE	-	DATE
DRAWN	VRP	
DESIGNED	DRB/KKM	
APPROVED		

INSTITUTE FOR PLASMA RESEARCH
BHAT, GANDHINAGAR-382 428.

TITLE
VACUUM VESSEL
RADIAL PORT (VV-RP) ASSY.

REF DRG NO: A1 REV F0

DRG.NO IPR/VTL/A1/16/4026 SHEET 11 OF 12

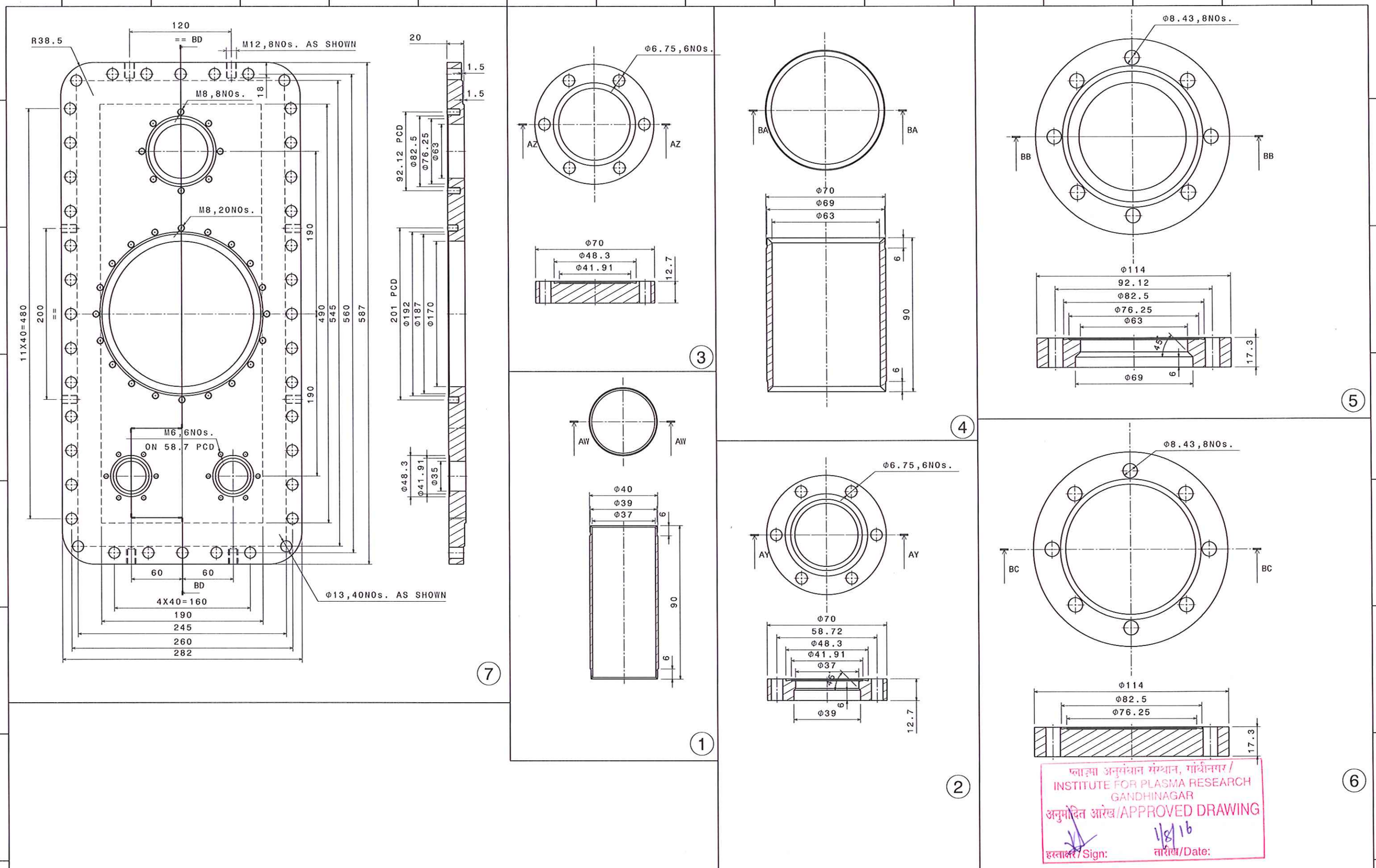

प्लाज़्मा अनुसंधान संस्थान, गांधीनगर /
INSTITUTE FOR PLASMA RESEARCH
GANDHINAGAR
अनुमोदित आरेख/APPROVED DRAWING
हस्ताक्षर/Sign: तारीख/Date: 1/8/16

DRG.NO	▽ 8-25	▽▽ 1.6-8	▽▽▽ 0.025-1.6	▽▽▽▽ < 0.025															
CO-ORDINATED BY																			
MACHINING DEVIATIONS FOR NON-TOLERANCED DIMENSIONS																			
LENGTH IN mm OF SHORTER SIDE OF ANGLES				LENGTH OR DIA	UPTO 6	6-30	30-120	120-315											
UPTO 10	10-50	50-120	OVER 120-400																
±1°	±0°-30'	±0°-20'	±0°-10'		±0.1	±0.2	±0.3	±0.5											

REV	ZONE	DESCRIPTION	DATE	REMARKS	APPROVED BY

REVISION COLUMN

ASS'Y GROUP:		SIZE A1	INSTITUTE FOR PLASMA RESEARCH BHAT, GANDHINAGAR-382 428.
ALL DIMENSIONS ARE IN mm UNLESS OTHERWISE STATED			
SCALE	-	DATE	TITLE VACUUM VESSEL RADIAL PORT (VV-RP) DETAIL
DRAWN	VRP		
DESIGNED	DRB/KKM		REF DRG NO: A1 — REV F0
APPROVED			DRG.NO IPR/VTL/A1/16/4026 — SHEET 12 OF 12

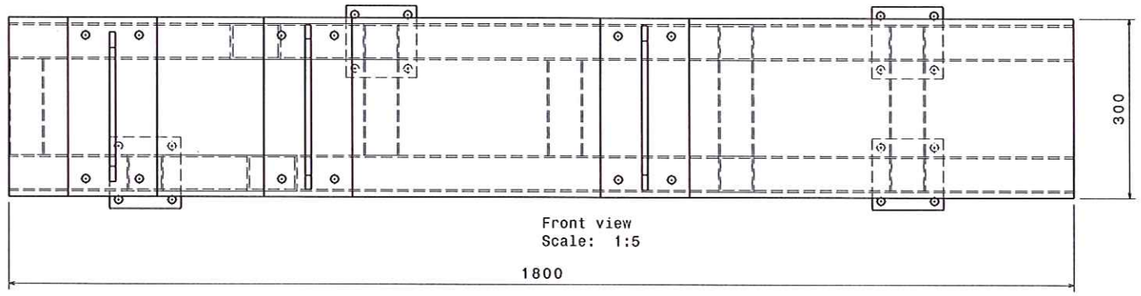

Front view
Scale: 1:5

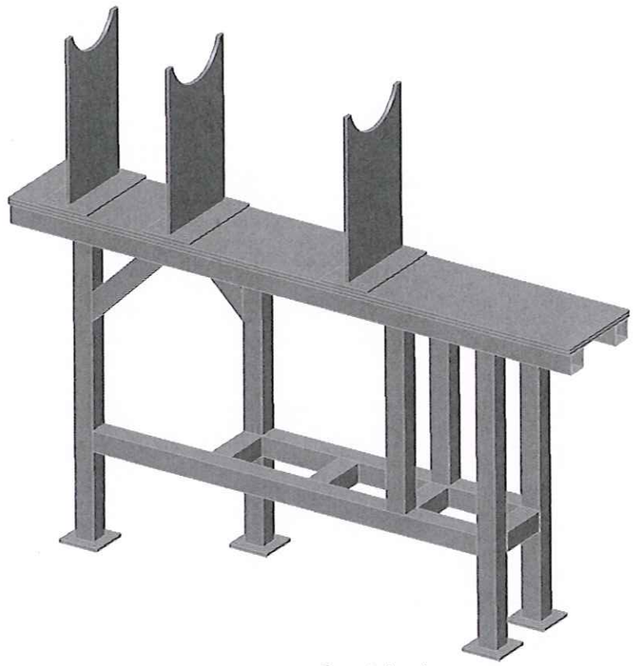

Isometric view
Scale: 1:8

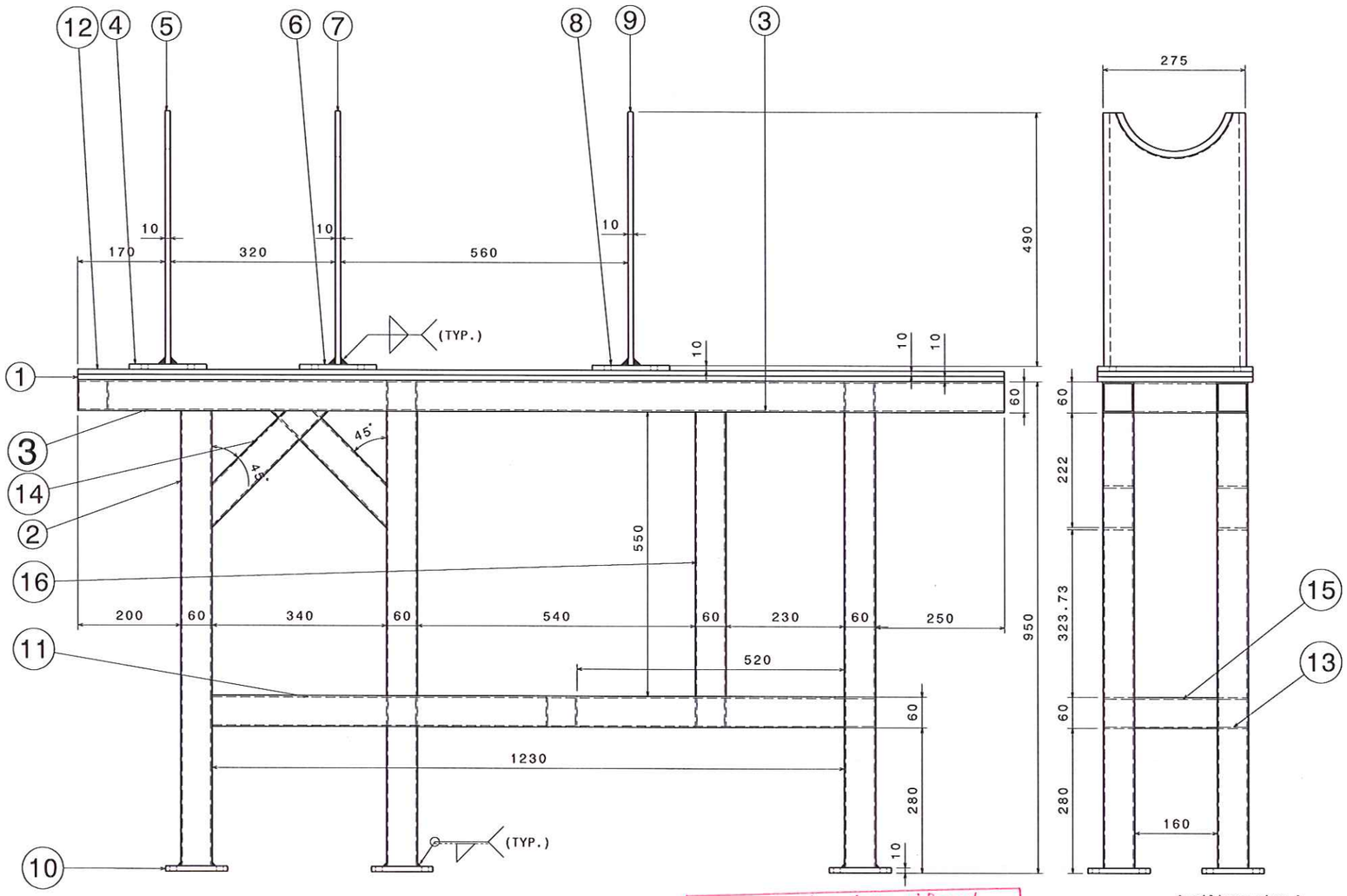

Auxiliary view A
Scale: 1:5

Item No.	Nomenclature	Material	Quantity	Weight	Revision
16	SQ. CHANNEL 60x60x550	Aluminium	2	-1.02kg	
15	SQ. CHANNEL 60x60x160	Aluminium	7	-0.297kg	
14	SQ. CHANNEL	Aluminium	2	-0.482kg	
13	SQ. CHANNEL 60x60x830	Aluminium	1	-1.539kg	
12	RECT. PLATE	G-10	1	-0kg	
11	SQ. CHANNEL 60x60x1230	Aluminium	1	-2.28kg	
10	BASE PLATE	Aluminium	4	-0.376kg	
9	CURVED PLATE	Aluminium	1	-3.265kg	
8	RECT. PLATE	Aluminium	1	-1.205kg	
7	CURVED PLATE	Aluminium	1	-3.249kg	
6	RECT. PLATE	Aluminium	1	-1.205kg	
5	CURVED PLATE	Aluminium	1	-3.03kg	
4	RECT. PLATE	Aluminium	1	-1.205kg	
3	SQ. CHANNEL 60x60x1800	Aluminium	2	-3.337kg	
2	SQ. CHANNEL 60x60x880	Aluminium	4	-1.631kg	
1	RECT. PLATE	Aluminium	1	-14.634kg	

प्लाज़्मा अनुसंधान संस्थान, गांधीनगर/
INSTITUTE FOR PLASMA RESEARCH
GANDHINAGAR
अनुमोदित आरेख/APPROVED DRAWING
हस्ताक्षर/Sign: 1/8/16 तारीख/Date:

DRG.NO	▽ 6-25	▽▽ 1.6-6	▽▽▽ 0.025-1.6	▽▽▽▽ < 0.025															
CO-ORDINATED BY					REV	ZONE	DESCRIPTION	DATE	REMARKS	APPROVED BY									
MACHINING DEVIATIONS FOR NON-TOLERANCED DIMENSIONS																			
LENGTH IN mm OF SHORTER SIDE OF ANGLES				LENGTH OR DIA	UPTO 6	6-30	30-120	120-315											
UPTO 10	10-50	50-120	OVER 120-400																
±1°	±0°-30'	±0°-20'	±0°-10'		±0.1	±0.2	±0.3	±0.5											

ASS'Y GROUP:		SIZE A1	INSTITUTE FOR PLASMA RESEARCH		
ALL DIMENSIONS ARE IN mm UNLESS OTHERWISE STATED			BHAT, GANDHINAGAR-382 428.		
SCALE	-	DATE	TITLE		
DRAWN	VRP		ADITYA_U_VTL_STR_RP_15		
DESIGNED	DRPKM		REF DRG NO: A1		REV R0
APPROVED			DRG.NO	IPR/VTL/A1/16/4026/1	SHEET 01 OF 04

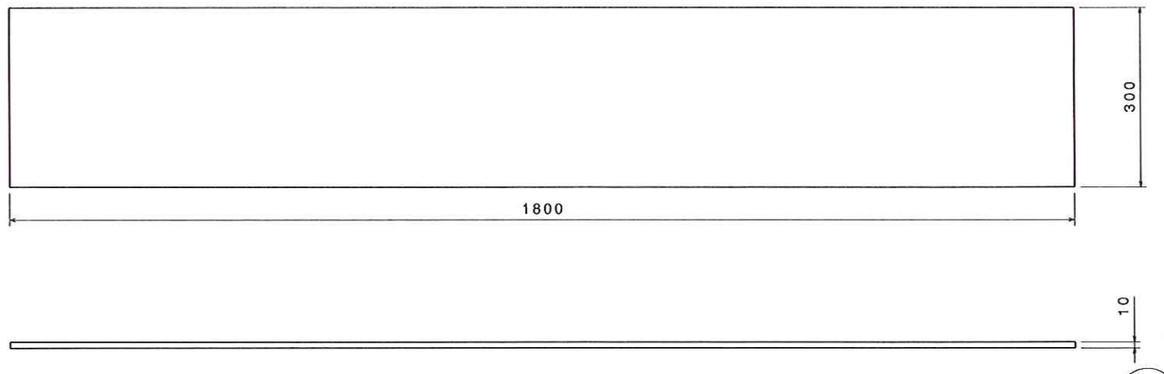

1

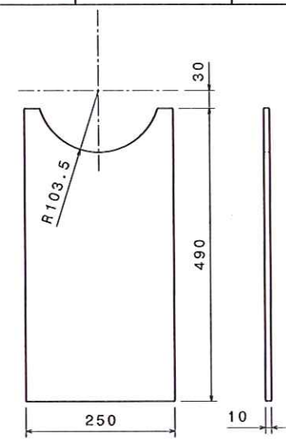

5

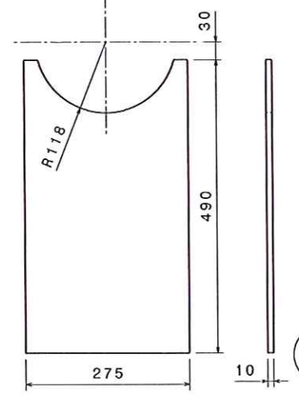

7

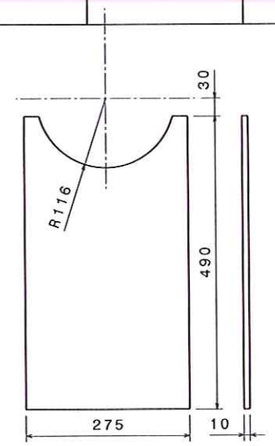

9

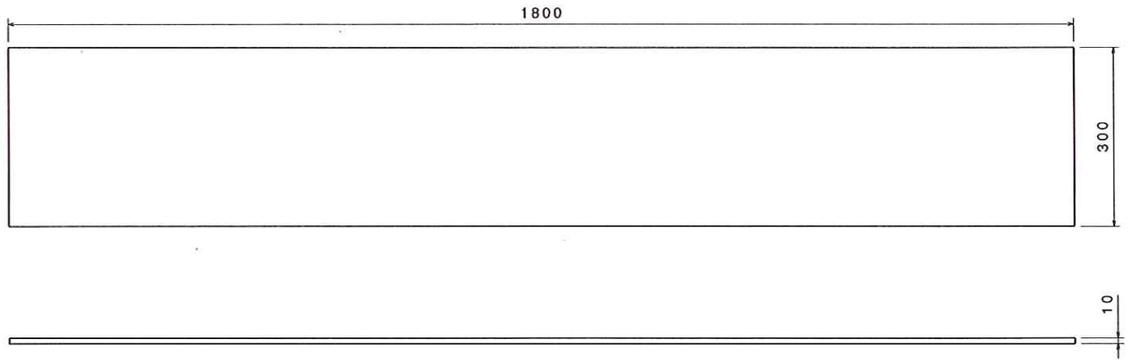

12

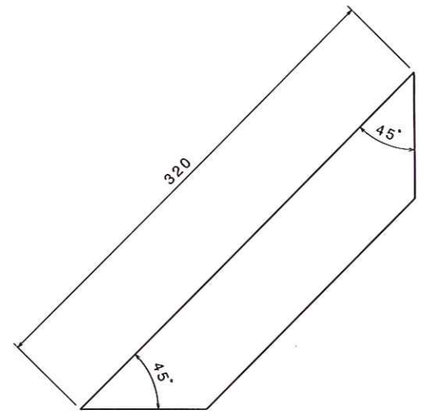

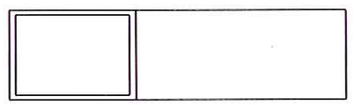

14

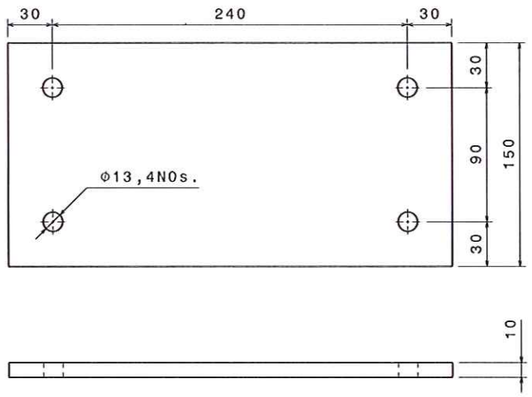

4 6 8

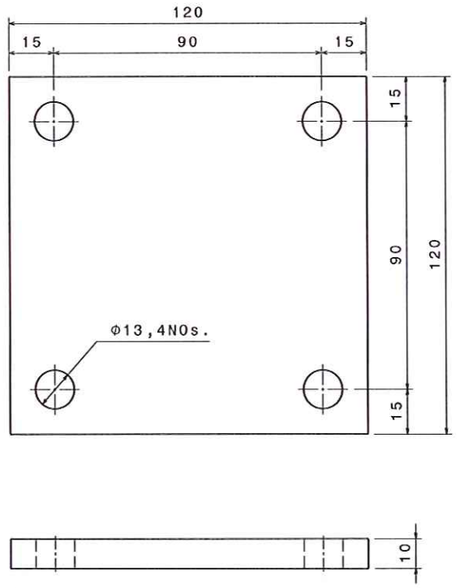

10

प्लाज़्मा अनुसंधान संस्थान, गांधीनगर /
INSTITUTE FOR PLASMA RESEARCH
GANDHINAGAR
अनुमोदित आरेख/APPROVED DRAWING
हस्ताक्षर/Sign: तारीख/Date: 1/8/16

DRG.NO	▽ 8-25	▽▽ 1.6-8	▽▽▽ 0.025-1.6	▽▽▽▽ < 0.025				REVISION COLUMN						ASS'Y GROUP:	SIZE A1	INSTITUTE FOR PLASMA RESEARCH	
CO-ORDINATED BY								REV	ZONE	DESCRIPTION	DATE	REMARKS	APPROVED BY	ALL DIMENSIONS ARE IN mm UNLESS OTHERWISE STATED		BHAT, GANDHINAGAR-382 428.	
MACHINING DEVIATIONS FOR NON-TOLERANCED DIMENSIONS														SCALE	-	DATE	TITLE
LENGTH IN mm OF SHORTER SIDE OF ANGLES				LENGTH OR DIA	UPTO 6	6-30	30-120	120-315						DRAWN	VRP		ADITYA_U_VTL_STR_RP_15
UPTO 10	10-50	50-120	OVER 120-400											DESIGNED	DRPKM		REF DRG NO: A1 / REV R0
±1°	±0°-30'	±0°-20'	±0°-10'		±0.1	±0.2	±0.3	±0.5						APPROVED			DRG.NO IPR/VTL/A1/16/4026/1 / SHEET 02 OF 04

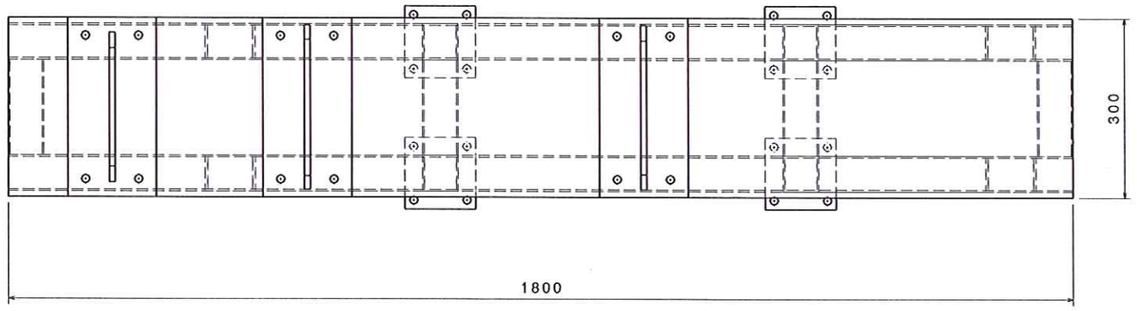

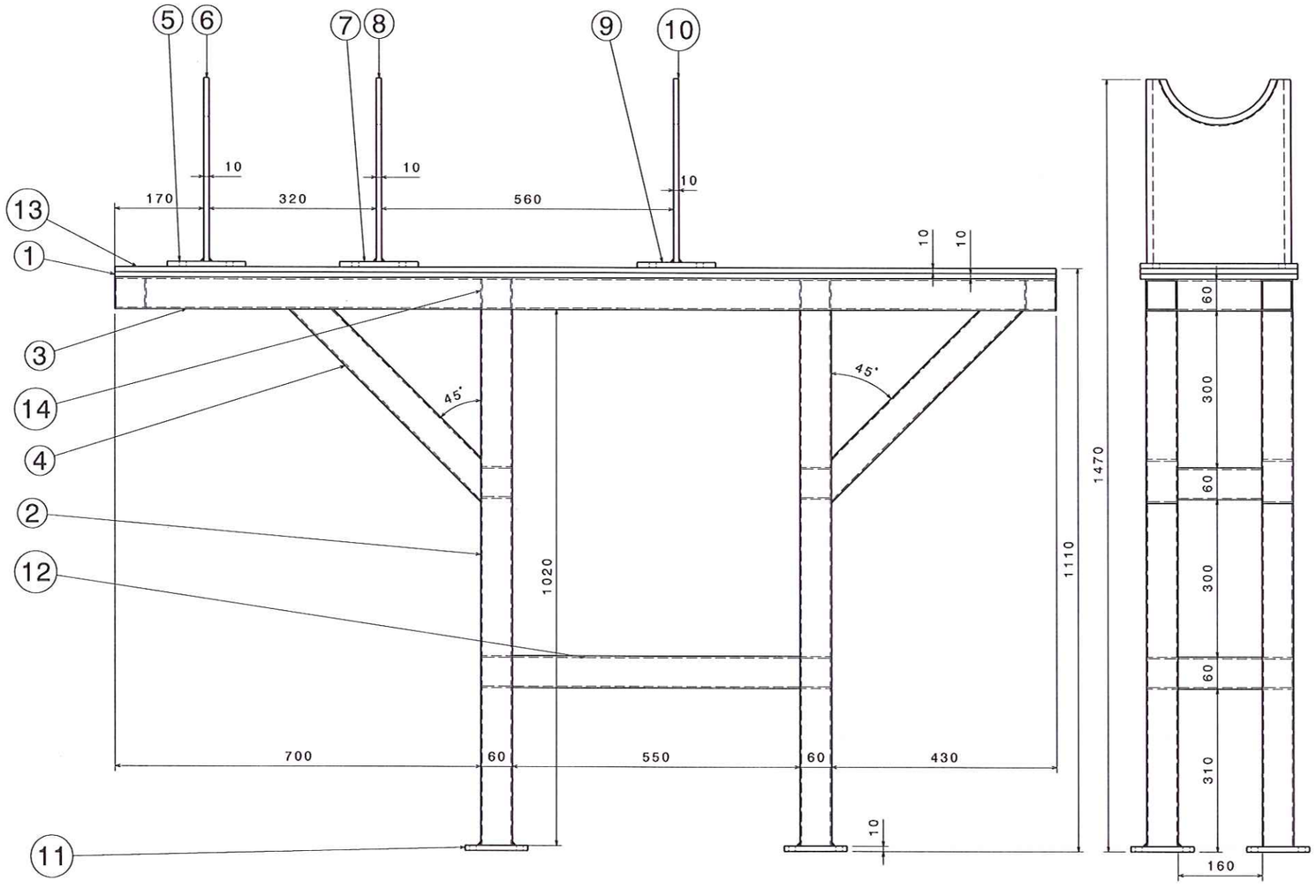

Isometric view
Scale: 1:8

प्लाज्मा अनुसंधान संस्थान, गांधीनगर /
INSTITUTE FOR PLASMA RESEARCH
GANDHINAGAR
अनुमोदित आरेख/APPROVED DRAWING
हस्ताक्षर/Sign: तारीख/Date: 1/08/16

Item No.	Nomenclature	Quantity	Material	Weight	Revision
14	SQ. CHANNEL 60x60x160	8	Aluminium	0.297kg	-
13	RECT. PLATE	1	G-10	-0kg	
12	SQ. CHANNEL 60x60x550	2	Aluminium	-1.02kg	
11	RECT. PLATE	4	Aluminium	-0.376kg	
10	CURVED PLATE	1	Aluminium	-2.222kg	
9	RECT. PLATE	1	Aluminium	-1.205kg	
8	CURVED PLATE	1	Aluminium	-2.205kg	
7	RECT. PLATE	1	Aluminium	-1.205kg	
6	CURVED PLATE	1	Aluminium	-2.081kg	
5	RECT. PLATE	1	Aluminium	-1.205kg	
4	SQ. CHANNEL	4	Aluminium	-0.853kg	
3	SQ. CHANNEL 60x60x1800	2	Aluminium	-3.337kg	
2	SQ. CHANNEL 60x60x1020	4	Aluminium	-1.891kg	
1	RECT. PLATE	1	Aluminium	-14.634kg	

DRG.NO	▽ 8-25	▽▽ 1.6-8	▽▽▽ 0.025-1.6	▽▽▽▽ < 0.025	
CO-ORDINATED BY					
MACHINING DEVIATIONS FOR NON-TOLERANCED DIMENSIONS					
LENGTH IN mm OF SHORTER SIDE OF ANGLES				LENGTH OR DIA	UPTO 6 / 6-30 / 30-120 / 120-315
UPTO 10	10-50	50-120	OVER 120-400		
±1°	±0°-30'	±0°-20'	±0°-10'		±0.1 / ±0.2 / ±0.3 / ±0.5

REV	ZONE	DESCRIPTION	DATE	REMARKS	APPROVED BY

REVISION COLUMN

ASS'Y GROUP:		SIZE A1	INSTITUTE FOR PLASMA RESEARCH BHAT, GANDHINAGAR-382 428.
ALL DIMENSIONS ARE IN mm UNLESS OTHERWISE STATED			
SCALE	-	DATE	
DRAWN	VRP		TITLE ADITYA_U_VTL_STR_RP_20
DESIGNED	DRVKM		REF DRG NO: A1 — REV R0
APPROVED			DRG.NO IPR/VTL/A1/16/4026/1 — SHEET 03 OF 04

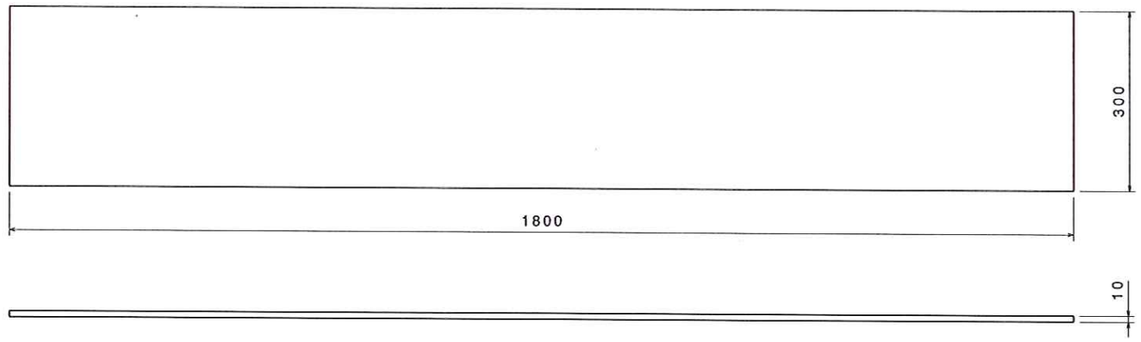

1

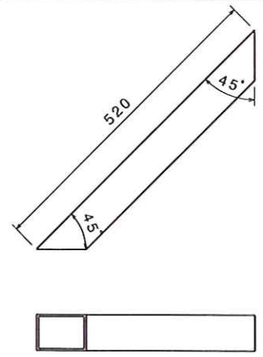

4

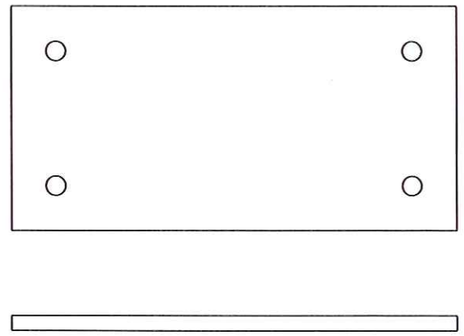

5 7 9

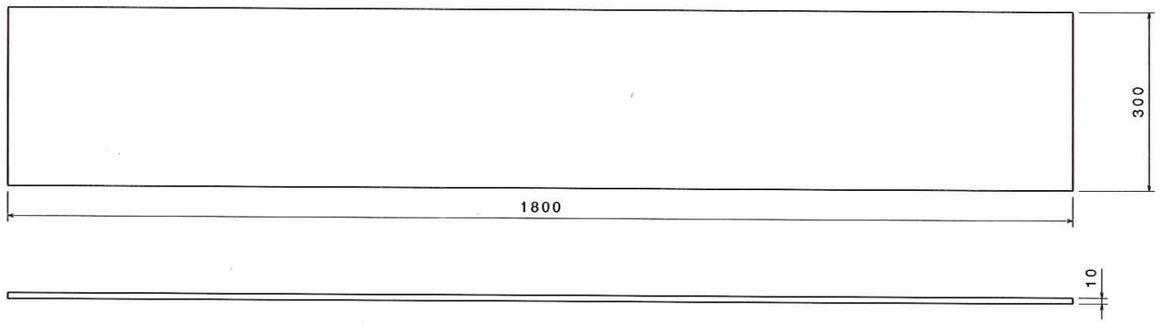

13

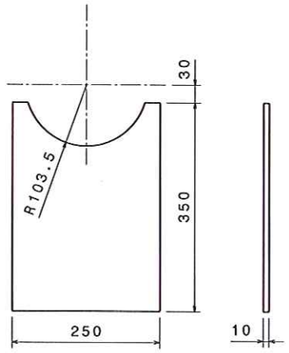

6

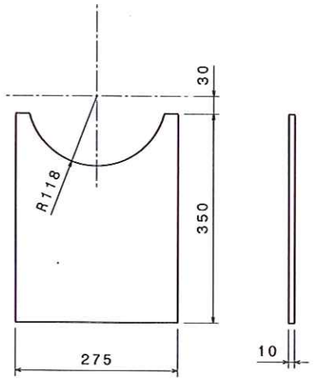

8

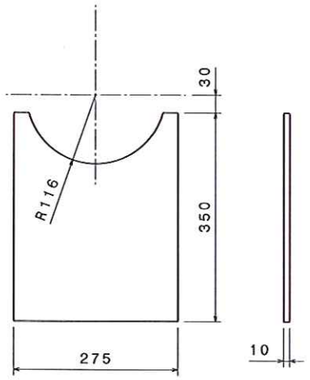

10

प्लाज्मा अनुसंधान संस्थान, गांधीनगर/
INSTITUTE FOR PLASMA RESEARCH
GANDHINAGAR
अनुमोदित आरेख/APPROVED DRAWING
हस्ताक्षर/Sign: तारीख/Date: 1/9/16

DRG.NO	▽ 8-25	▽▽ 1.6-8	▽▽▽ 0.025-1.6	▽▽▽▽ < 0.025			REVISION COLUMN				ASS'Y GROUP:		SIZE A1	INSTITUTE FOR PLASMA RESEARCH BHAT, GANDHINAGAR-382 428.		
CO-ORDINATED BY					REV	ZONE	DESCRIPTION	DATE	REMARKS	APPROVED BY	ALL DIMENSIONS ARE IN mm UNLESS OTHERWISE STATED					
MACHINING DEVIATIONS FOR NON-TOLERANCED DIMENSIONS											SCALE	-	DATE	TITLE ADITYA_U_VTL_STR_RP_20		
LENGTH IN mm OF SHORTER SIDE OF ANGLES				LENGTH OR DIA	UPTO 6	6-30	30-120	120-315			DRAWN	VRP				
UPTO 10	10-50	50-120	OVER 120-400								DESIGNED	DRJYKM		REF DRG NO: A1		REV R0
±1°	±0°-30'	±0°-20'	±0°-10'		±0.1	±0.2	±0.3	±0.5			APPROVED			DRG.NO IPR/VTL/A1/16/4026/1		SHEET 04 OF 04